POLE	HP	kW	Hz	VOLT	r/min(RPM)	INS	RATING	DIMENSION IN	APPROX WEIGHT	BEARINGS
8	200	149	60	460	900	F	CONT.	INCH	2875 LBS.	DE: NU320 NDE: 6316

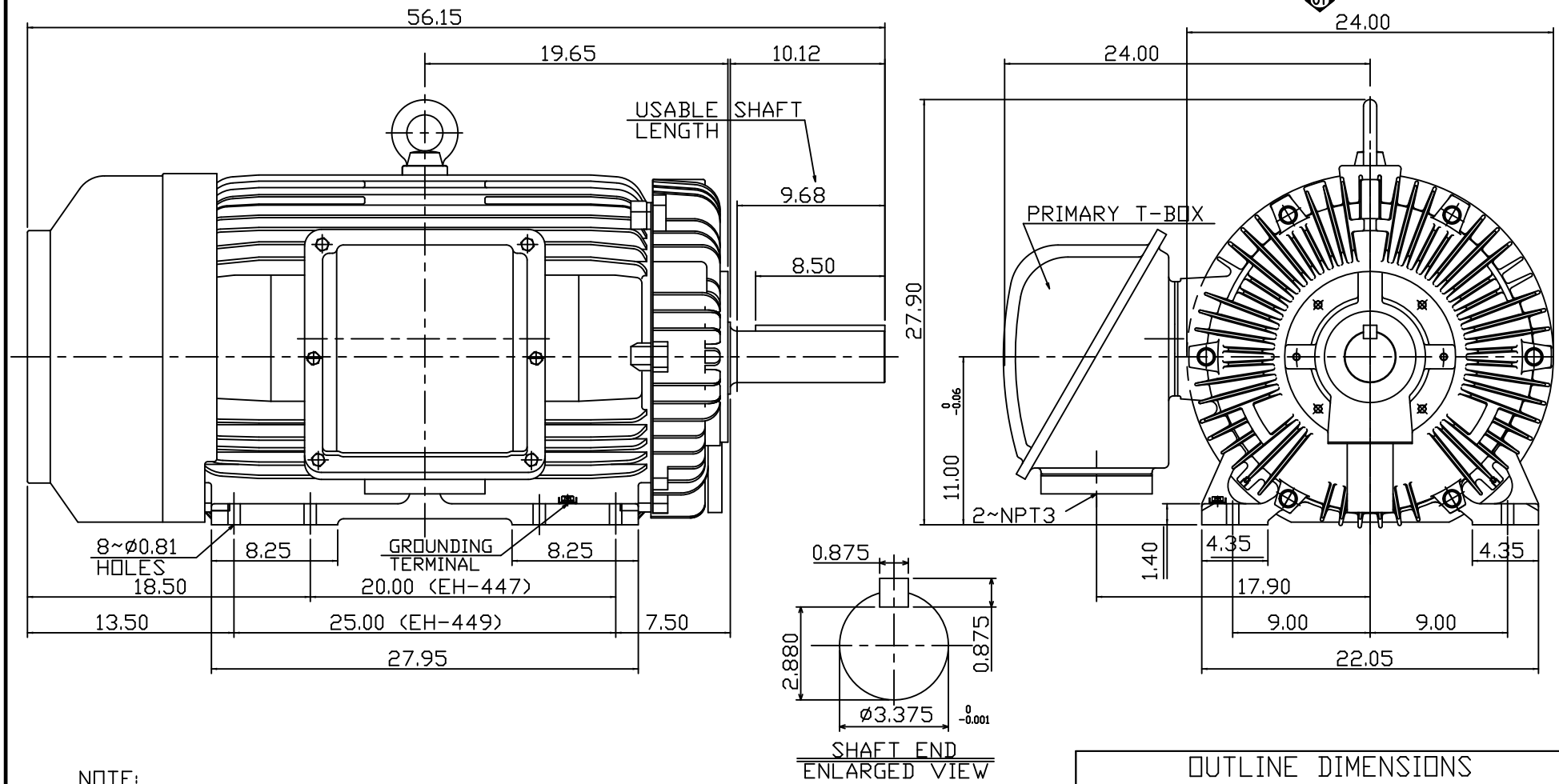

NOTE:
1. DIMENSIONS IN INCHES
2. FRAME NO. 449TZ
3. F CLASS INSULATION, S.F.1.15
4. FOR BELT SERVICE
5. ENCLOSURE: IP55
6. WITH THERMISTOR: PTC 140°C 3PCS
7. SHAFT MATERIAL: SCM440 Q&T (AISI 4140 EQUIV)
8. CORROSION PROOF

DWG.	C.COOK	02-01-18

OUTLINE DIMENSIONS
3-PHASE INDUCTION MOTOR

MOTOR TYPE	AEHHGD	FRAME NO.	449TZ
CATALOG NO.	CDP2008TR	DATE	02-01-2018

TECO Westinghouse

DWG NO. 31057G020271