POLE	HP	kW	Hz	VOLT	r/min(RPM)	INS	RATING	DIMENSION IN	APPROX WEIGHT	BEARINGS
6	300	224	60	460	1200	F	CONT.	INCH	3450 LBS.	DE: NU320 NDE: 6316

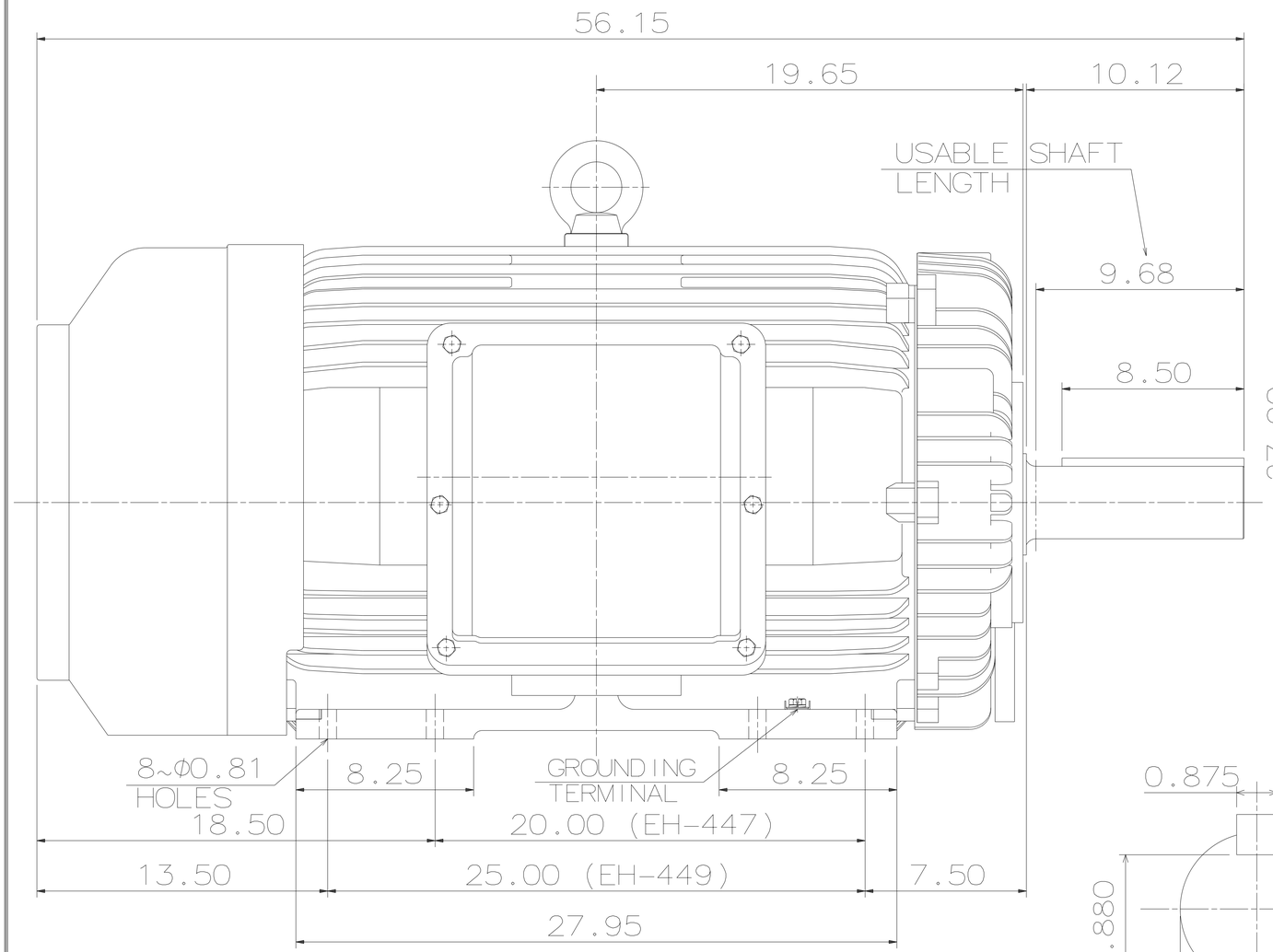

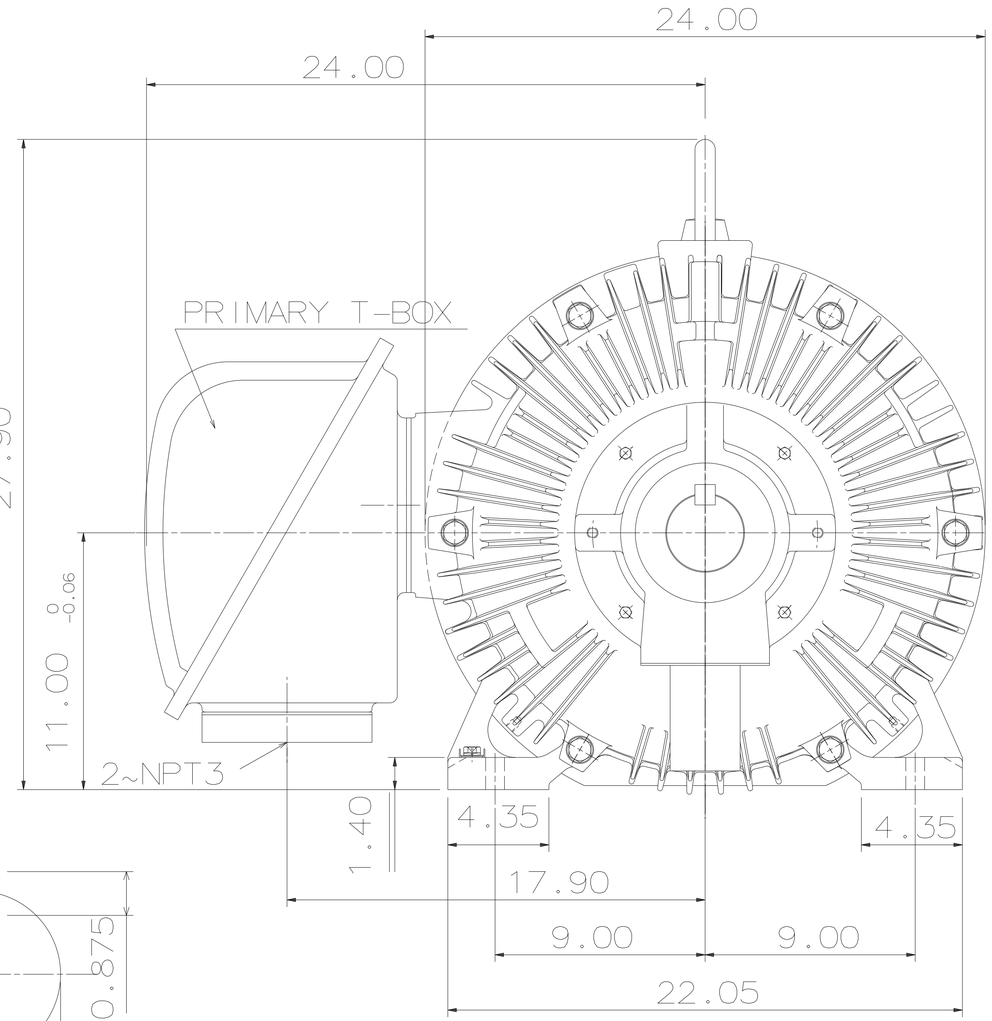

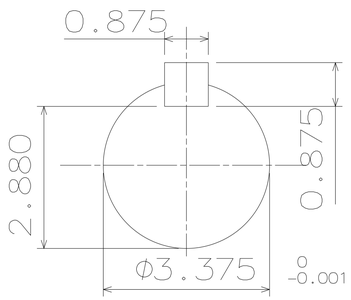

SHAFT END
ENLARGED VIEW

NOTE:
1. DIMENSIONS IN INCHES
2. FRAME NO. 449TZ
3. F CLASS INSULATION, S.F.1.15
4. FOR BELT SERVICE
5. ENCLOSURE: IP55
6. WITH THERMISTOR: PTC 140℃ 3PCS
7. SHAFT MATERIAL: SCM440 Q&T (AISI 4140 EQUIV)
8. CORROSION PROOF

OUTLINE DIMENSIONS
3-PHASE INDUCTION MOTOR

MOTOR TYPE	AEHHGD	FRAME NO.	449TZ
CATALOG NO.	CDP3006TR	DATE	02-01-2018

DWG.	C.COOK	02·01·18

TECO Westinghouse

DWG NO.
31057G020271