DATE FEBRUARY 23, 2007	OUTLINE DIMENSIONS	MOTOR TYPE: ASHH
CATALOG NO. DHP01525	3-PHASE INDUCTION MOTOR	FRAME NO. 215T

Pole	HP	KW	Hz	VOLT	Syn. Speed RPM
2	15	11.2	60	575	3600

Ins	Rating	Dimension in	Approx Weight	Bearings
F	CONT.	inch	185 lbs.	DE: 6308zz NDE: 6306zz

Open Protected Drip-Proof Squirrel Cage Rotor.

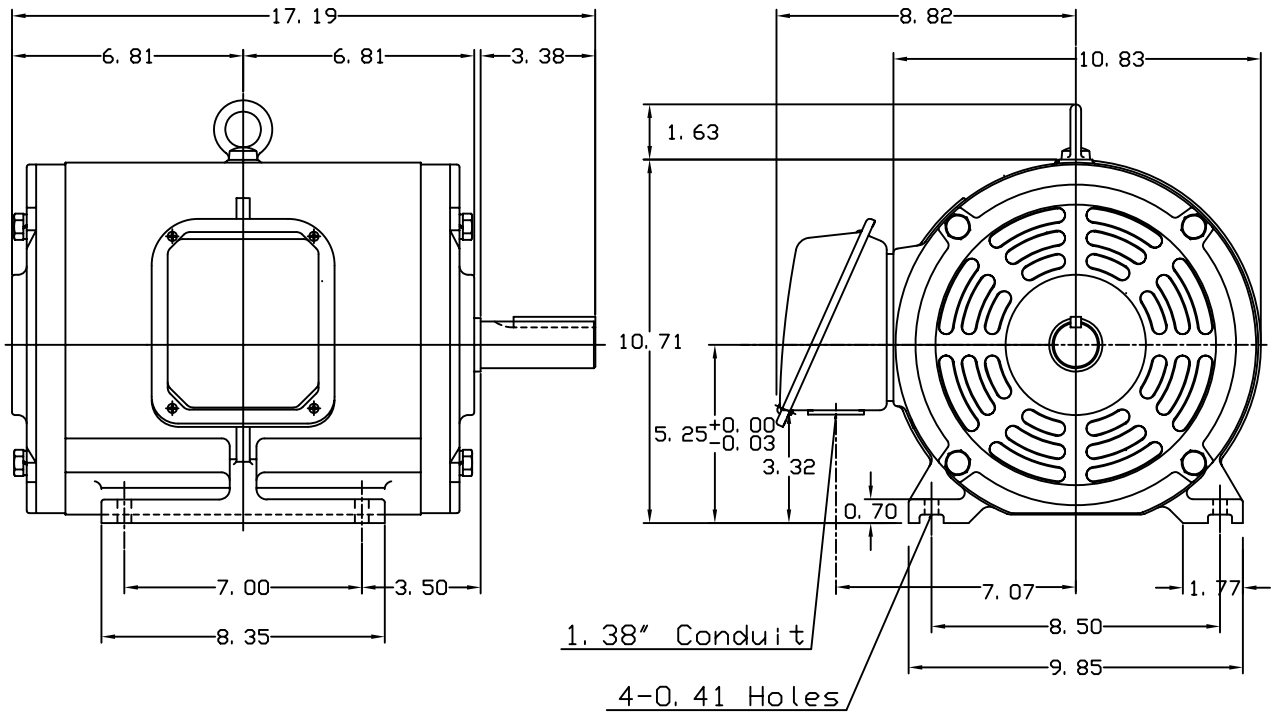

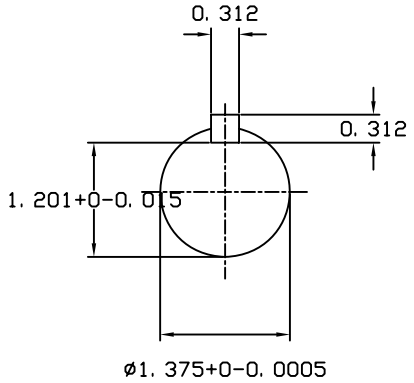

DWN.	J. H. LIANG	12-22-98	TECO Westinghouse	DWG NO. 31057H382002
CHKD.	C. S. LO	05-20-99		
APPD.	Y. B. HUANG	05-20-99		