DATE FEBRUARY 23, 2007	OUTLINE DIMENSIONS	MOTOR TYPE: ASHH
CATALOG NO. DHP03025	3-PHASE INDUCTION MOTOR	FRAME NO. 284TS

Pole	HP	KW	Hz	VOLT	Syn. Speed RPM
2	30	22.4	60	575	3600

Ins	Rating	Dimension in	Approx Weight	Bearings
F	CONT.	inch	370 lbs.	DE: 6212C3 NDE: 6211C3

Open Protected Drip-Proof Type. Squirrel-cage Rotor.

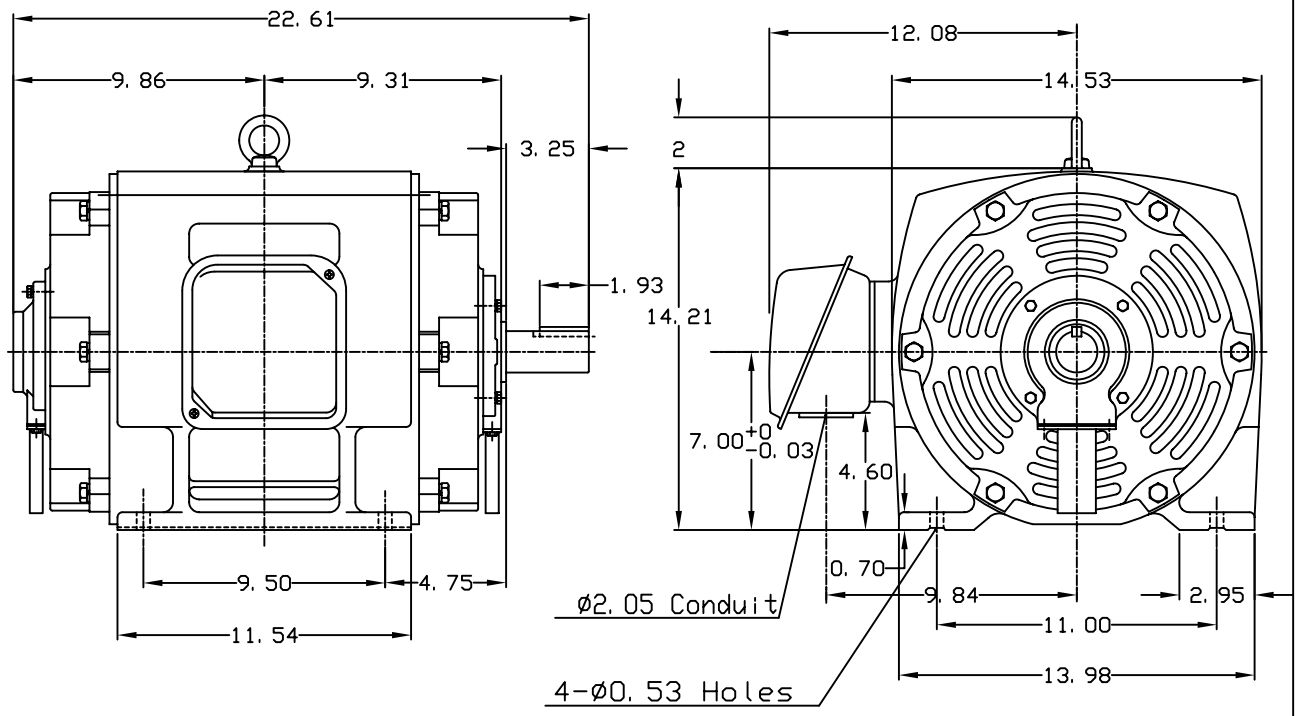

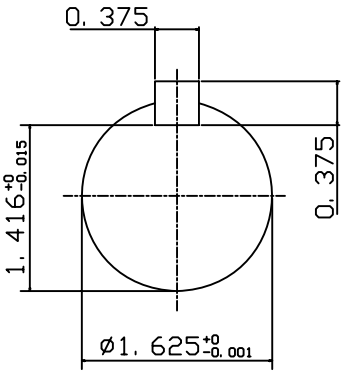

DWN.	J. H. LIANG	12·22·98	TECO Westinghouse	DWG NO.
CHKD.	C. H. KAO	06·10·99		31057H385000
APPD.	Y. B. HUANG	06·10·99		