TYPE	OUTPUT		POLE	TIME RATING	VOLTAGE V	Hz	SYN.SPEED R.P.M
	HP.	kW.					
ASHH	125	93.3	6	CONT.	575	60	1200

DRIP PROOF TYPE. SQUIRREL-CAGE ROTOR

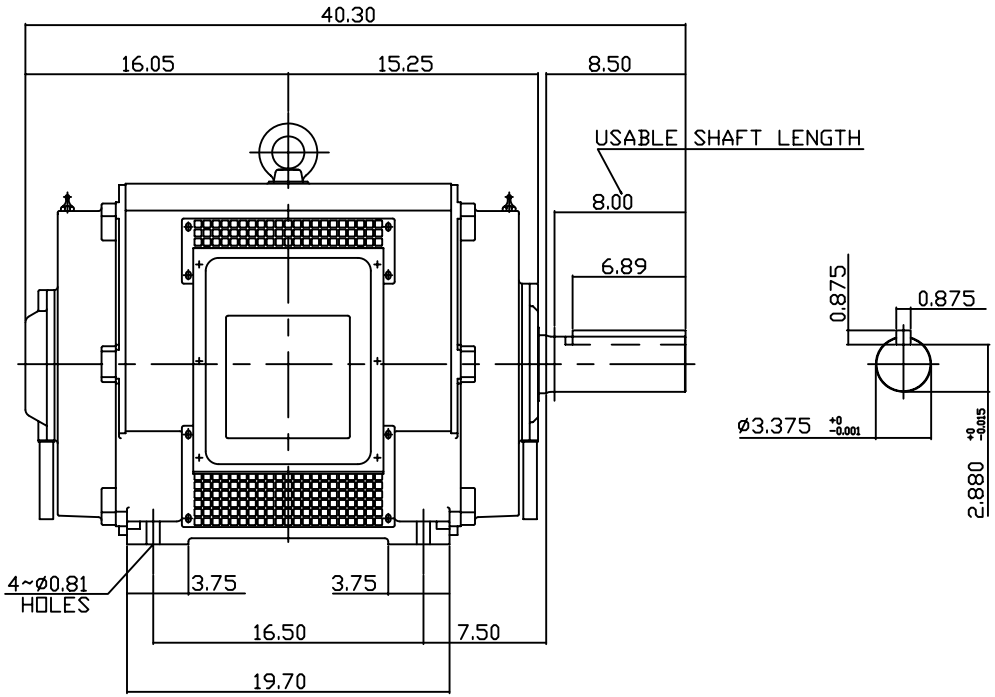

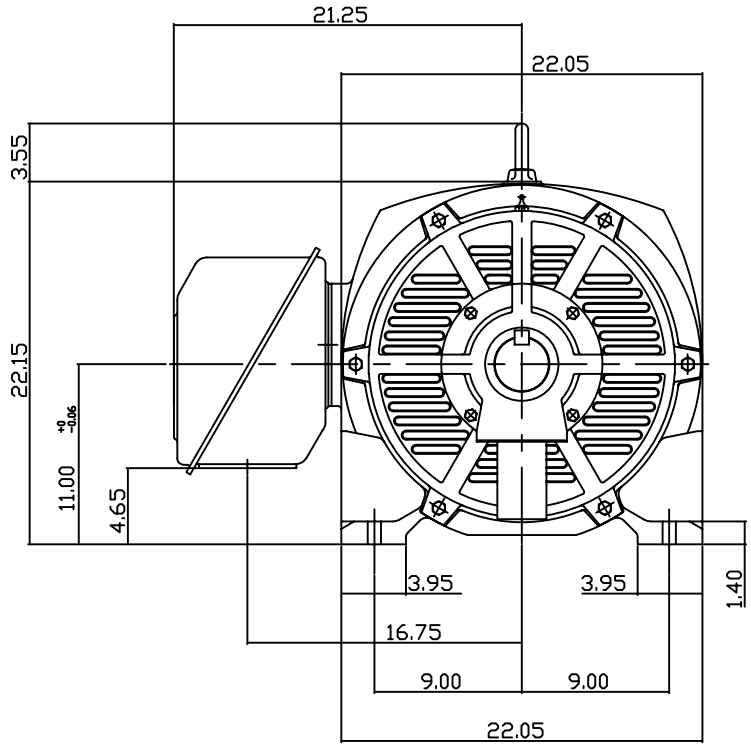

NOTE:

1. DIMENSIONS IN INCH.
2. FRAME NO.445T
3. F CLASS INSULATION, S.F.1.15
4. FOR BELT DRIVE
5. BEARING SIZE: DRIVE END: NU318
   NON-DRIVE END: 6316
6. MOTOR APPROX. WEIGHT: 1430LBS

TB-56SC

DWN.	W.L.LIN	MAR·26·2003
CHKD.	W.L.LIN	MAR·26·2003
APPD.	C.WANG	MAR·26·2003

DATE May 25, 2007

Cat.#: DHP12565R

OUTLINE DIMENSIONS

3-PHASE INDUCTION MOTOR

TECO Westinghouse

DWG NO. 3A040T261

REV: 00