TYPE	OUTPUT		POLE	TIME RATING	VOLTAGE V	Hz	SYN.SPEED R.P.M
	HP.	kW.					
ASHH	150	112	4	CONT.	380	50	1500

DRIP PROOF TYPE, SQUIRREL-CAGE ROTOR

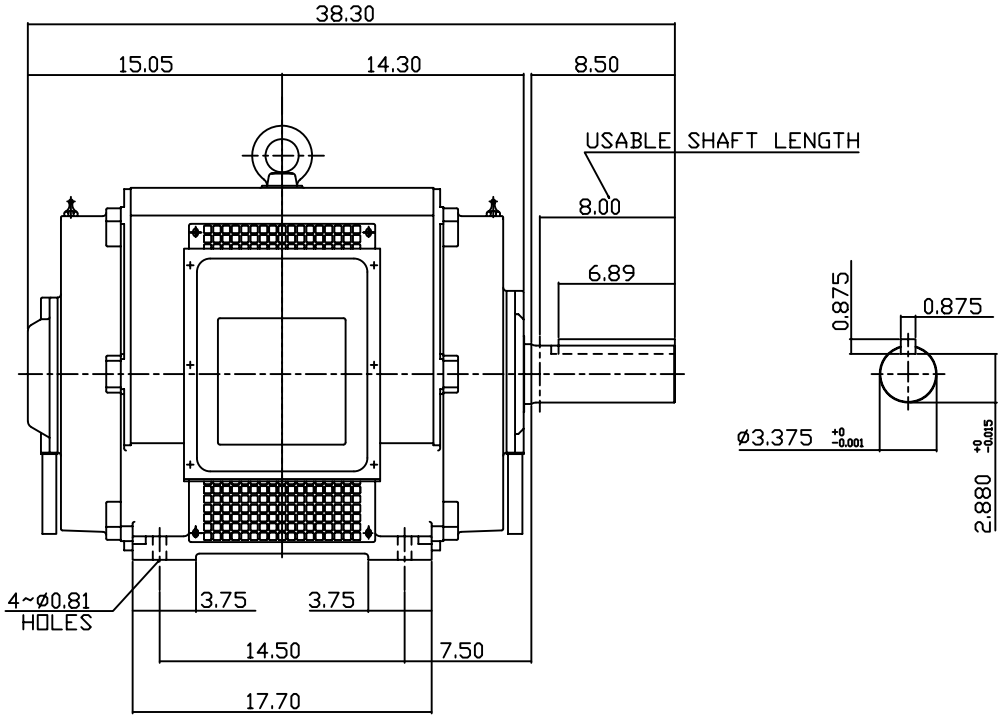

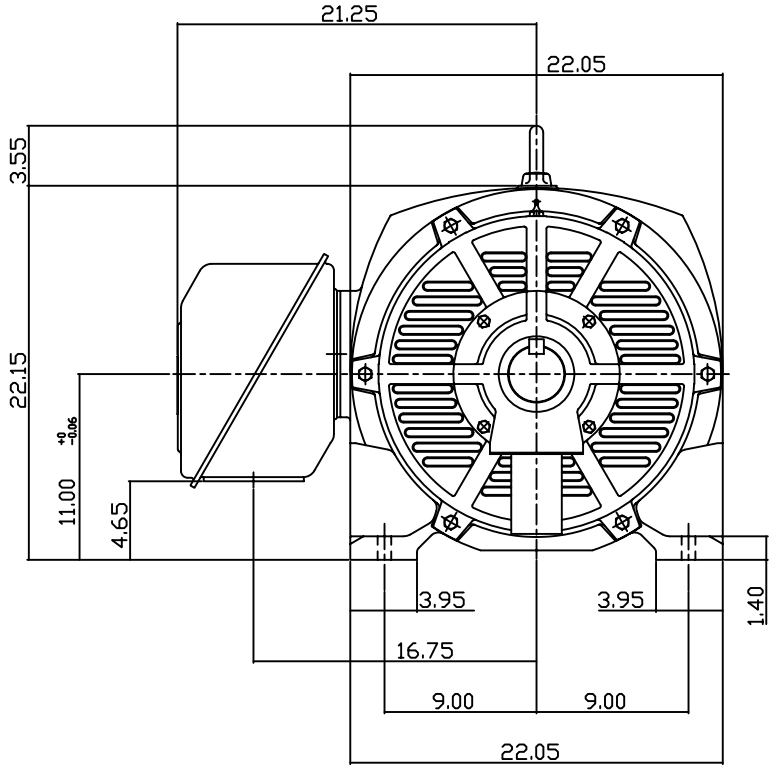

NOTE:

1. DIMENSIONS IN INCH.
2. FRAME NO.444T
3. F CLASS INSULATION, S.F. 1.0
4. FOR DIRECT FLEXIBLE COUPLING
5. BEARING SIZE: DRIVE END: 6318
   NON-DRIVE END: 6316
6. MOTOR APPROX. WEIGHT: 1320 LBS

TB-56SC

DWN.	W.L.LIN	MAR·26·2003
CHKD.	W.L.LIN	MAR·26·2003
APPD.	C.WANG	MAR·26·2003

DATE February 24, 2007

CATALOG NO. DHP1504-50

TECO Westinghouse

OUTLINE DIMENSIONS

3-PHASE INDUCTION MOTOR

DWG NO. 3A040T259-1

REV: 00