DATE: JUNE 27, 2019	OUTLINE DIMENSIONS	MOTOR TYPE: DVEM
CATALOG NO.: DM0304	PERMANENT MAGNET MOTOR	FRAME NO. 286T

Pole	HP	kW	Hz	VOLT	r/min(rpm)
6	30	22	90	460V	1800

Ins	Rating	Dimension in	Approx Weight	Bearings
F	CONT.	inch	326 lbs	DE: 6311ZZ NDE: 6310ZZ

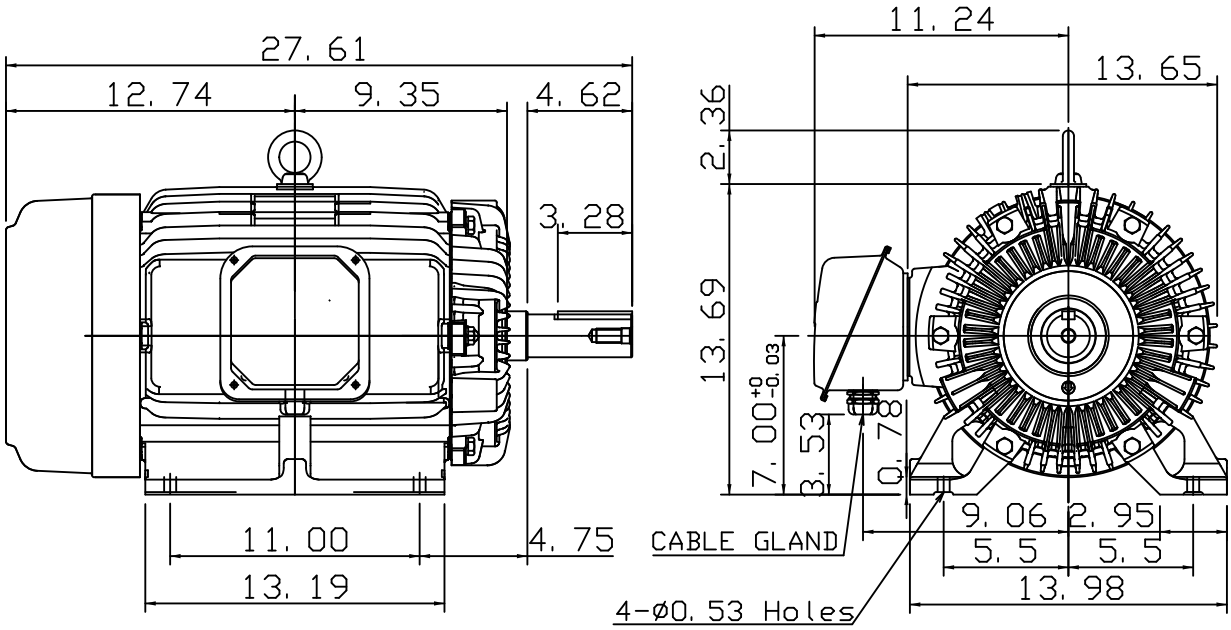

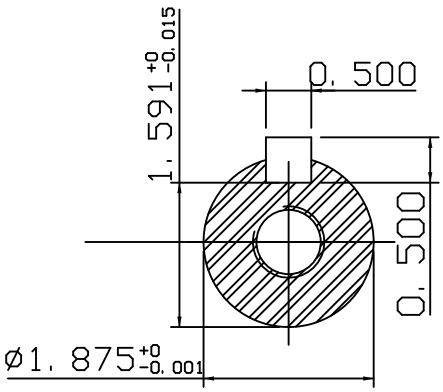

Note: 1. IP55 Protection
2. CABLE GLAND(PF1 1/2")
SUITABLE FOR RANGE
Ø1.22~Ø1.61

1	06.20.19	邱柏人	E8195542T2

DWG.	Mahato	05·02·19	TECO Westinghouse	DWG NO.
CHKD.	P. Z. HSIEH	05·06·19		31057M047021
APPD.	M. C. JENG	05·06·19		