DATE Sept. 25, 2006	OUTLINE DIMENSIONS	MOTOR TYPE: AEHH8N-CF
Cat. #: EP0016C-50	3-PHASE INDUCTION MOTOR	FRAME NO. 145TC

Pole	HP	kW	Hz	VOLT	Syn. Speed r/min(rpm)
6	1	.75	50	190/380	1000

Ins	Rating	Dimension in	Approx Weight	Bearings
F	CONT.	inches	65 lbs	DE: 6205ZZ NDE: 6205ZZ

Totally Enclosed Fan-Cooled Type, Squirrel-Cage Rotor.

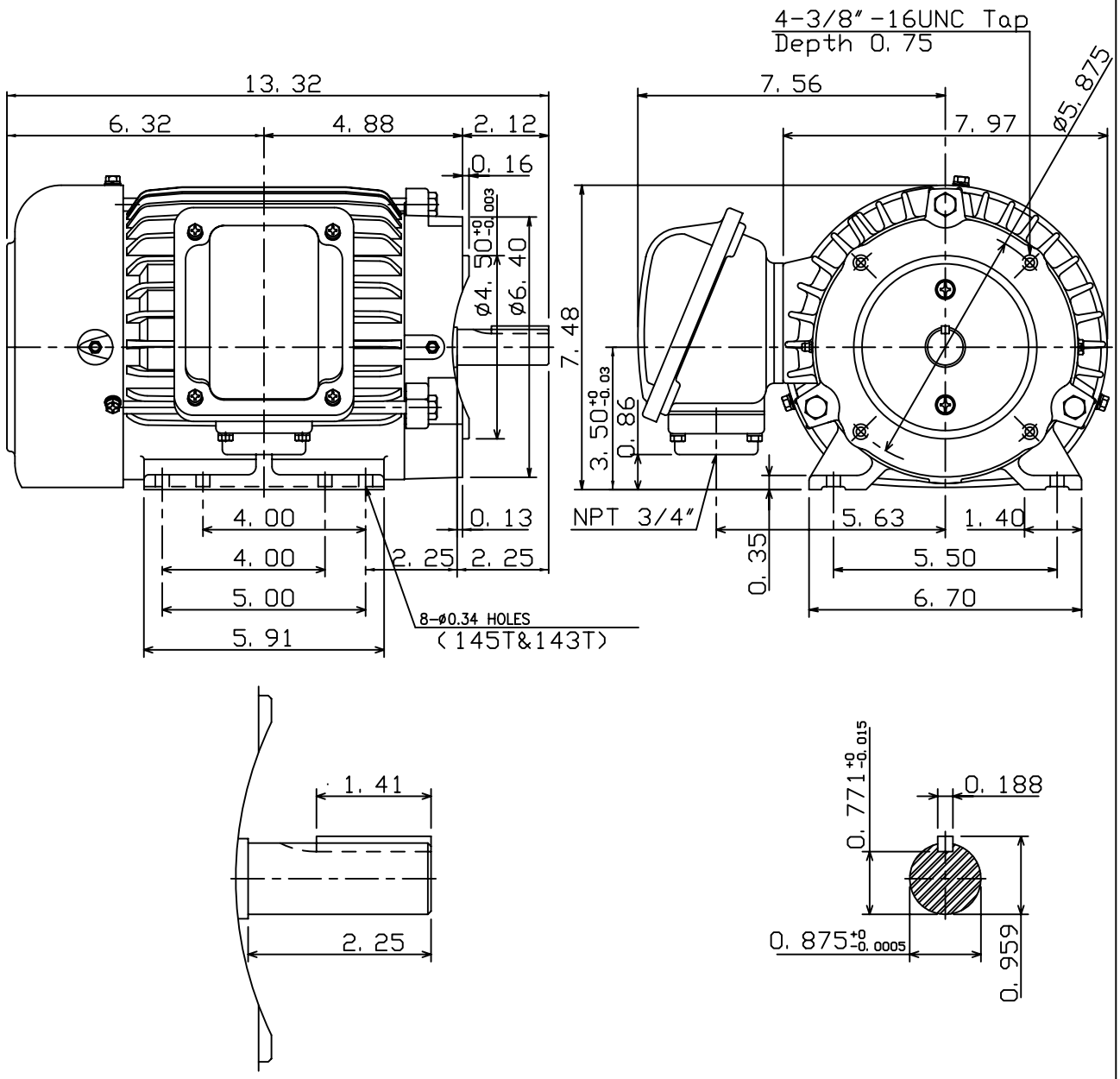

DWN.	C. S. LO	12-22-04	TECO Westinghouse
CHKD.	C. S. LO	12-27-04	DWG NO. 31049J806230
APPD.	M. C. TSAI	12-27-04	