DATE January 20, 2009	OUTLINE DIMENSIONS	MOTOR TYPE: AEHH8N-CF
CAT. #: EP0034C	3-PHASE INDUCTION MOTOR	FRAME NO. 182TC

Pole	HP	kW	Hz	VOLT	Syn.Speed r/min(rpm)
4	3	2.2	60	230/460	1800

Ins	Rating	Dimension in	Approx Weight	Bearings
F	CONT.	inches	100 lbs	DE: 6306ZZ NDE: 6306ZZ

Totally Enclosed Fan-Cooled Type.Squirrel-Cage Rotor.

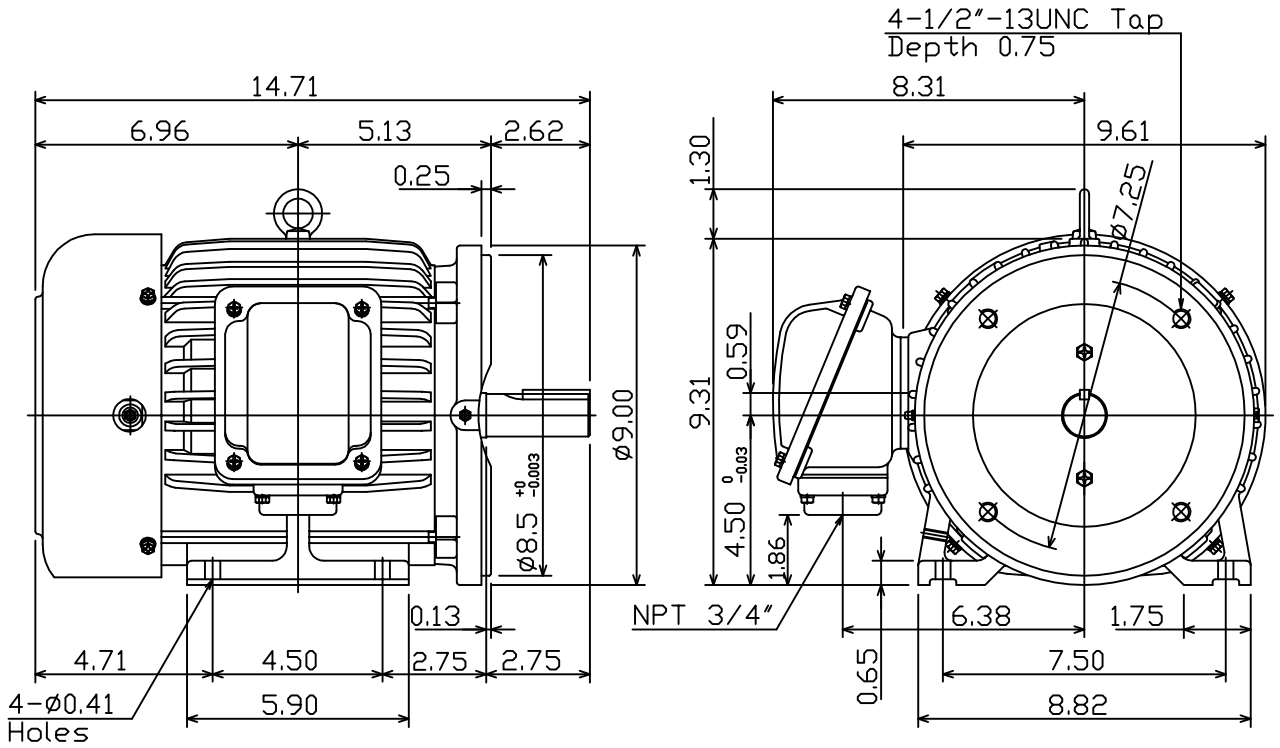

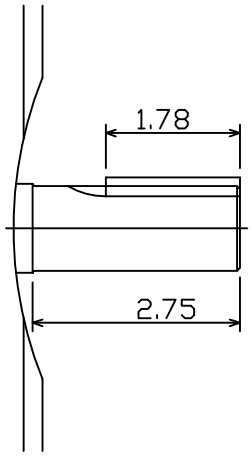

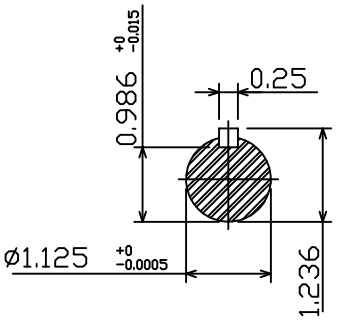

DWN.	D.V.CHIAN	09·13·04	TECO Westinghouse
CHKD.	C.S.LO	09·20·04	
APPD.	M.C.TSAI	09·20·04	

DWG NO. 31049M891080