DATE Sept. 25, 2006	OUTLINE DIMENSIONS	MOTOR TYPE: AEHH8N-CF
Cat. #: EP0036C-50	3-PHASE INDUCTION MOTOR	FRAME NO. 213TC

Pole	HP	kW	Hz	VOLT	Syn. Speed r/min(rpm)
6	3	2.3	50	190/380	1000

Ins	Rating	Dimension in	Approx Weight	Bearings
F	CONT.	inches	175	DE: 6308ZZ NDE: 6306ZZ

Totally Enclosed Fan-Cooled Type. Squirrel-Cage Rotor.

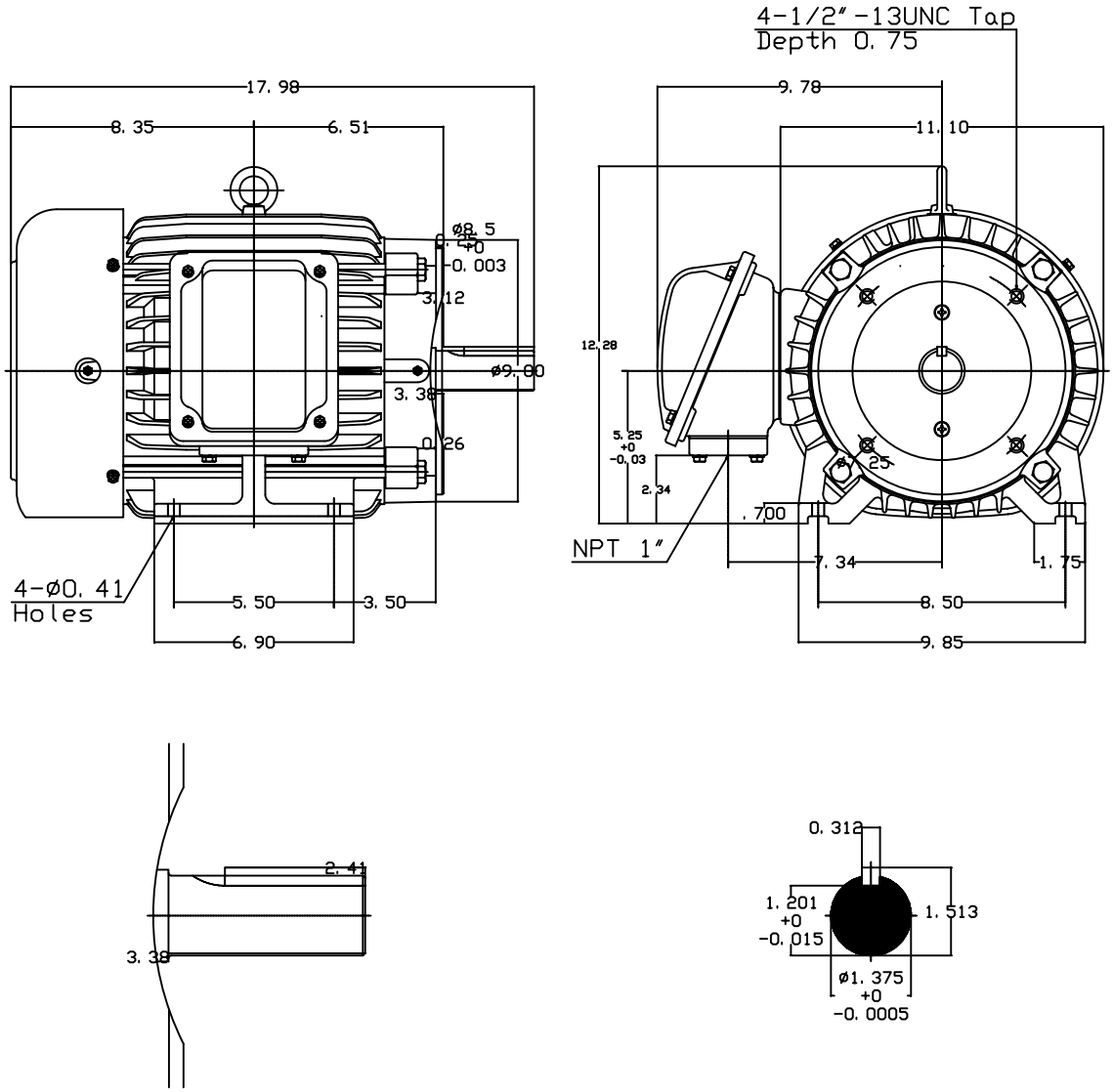

DWN.	F. C. HWU	07·22·97	TECO Westinghouse	DWG NO.
CHKD.	C. S. LO	07·23·97		31049J809060
APPD.	Y. B. HUANG	07·23·97		