DATE Sept. 25, 2006	OUTLINE DIMENSIONS	MOTOR TYPE: AEHH8N-CF
Cat. #: EP0406C	3-PHASE INDUCTION MOTOR	FRAME NO. 364TC

Pole	HP	kW	Hz	VOLT	Syn. Speed r/min(rpm)
6	40	30	60	230/460	1200

Ins	Rating	Dimension in	Approx Weight	Bearings	
F	CONT.	inches	920 lbs	DE: 6313	NDE: 6213

Totally Enclosed Fan Cooled Type. Squirrel-cage Rotor.

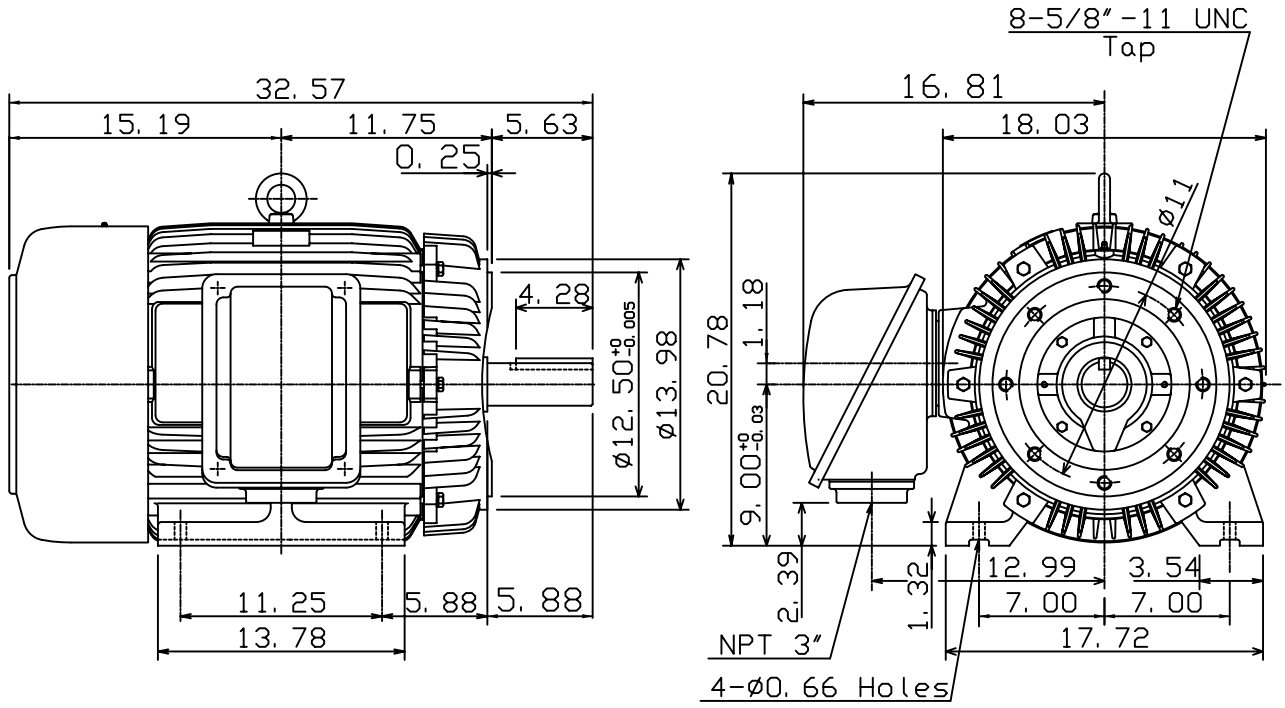

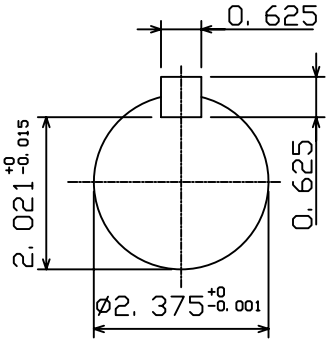

1	01.11.05		K. L. KUO

DWN.	W. C. LAY	07-21-97	TECO Westinghouse	DWG NO.
CHKD.	C. H. KAO	07-21-97		31049J717101
APPD.	Y. B. HUANG	07-21-97		