DATE Sept. 25, 2006	OUTLINE DIMENSIONS	MOTOR TYPE: AEHH8N-CF
Cat. #: EP0502C-50	3-PHASE INDUCTION MOTOR	FRAME NO. 326TSC

Pole	HP	kW	Hz	VOLT	Syn. Speed r/min(rpm)
2	50	37.3	50	190/380	3000

Ins	Rating	Dimension in	Approx Weight	Bearings
F	CONT.	inches	710 lbs	DE: 6312C3 NDE: 6212C3

Totally Enclosed Fan Cooled Type. Squirrel-cage Rotor.

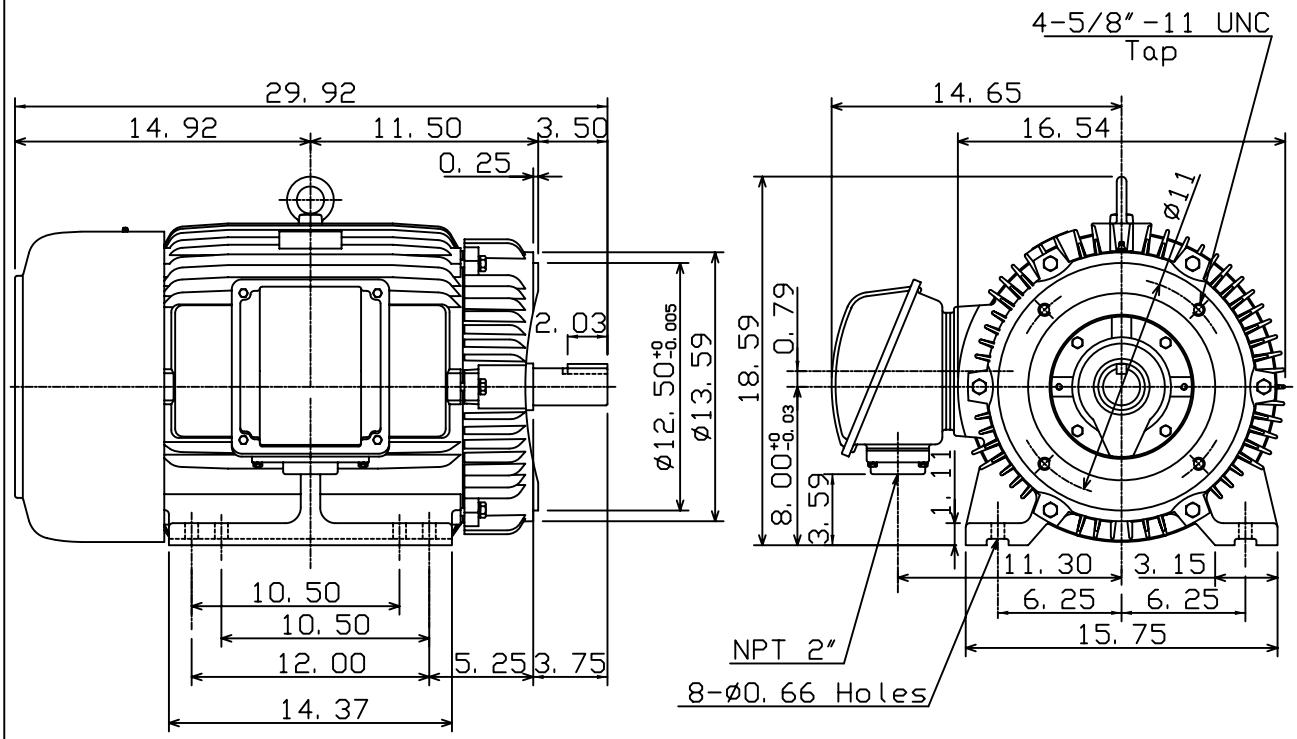

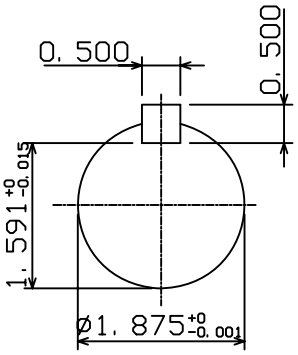

DWN.	K. L. KUO	01·10·05	TECO Westinghouse	DWG NO.
CHKD.	C. H. KAO	01·28·05		31049J714070
APPD.	M. C. TSAI	01·28·05		