DATE APRIL 1, 2020	OUTLINE DIMENSIONS	MOTOR TYPE: AEHH8N
CATALOG NO.: EP0608	3-PHASE INDUCTION MOTOR	FRAME NO. 405T

Pole	HP	kW	Hz	VOLT	r/min(rpm)
8	60	45	60	230/460	900

Ins	Rating	Dimension in	Approx Weight	Bearings	
F	CONT.	inches	1356 lbs	DE: 6317	NDE: 6313

Totally Enclosed Fan Cooled Type. Squirrel-cage Rotor.

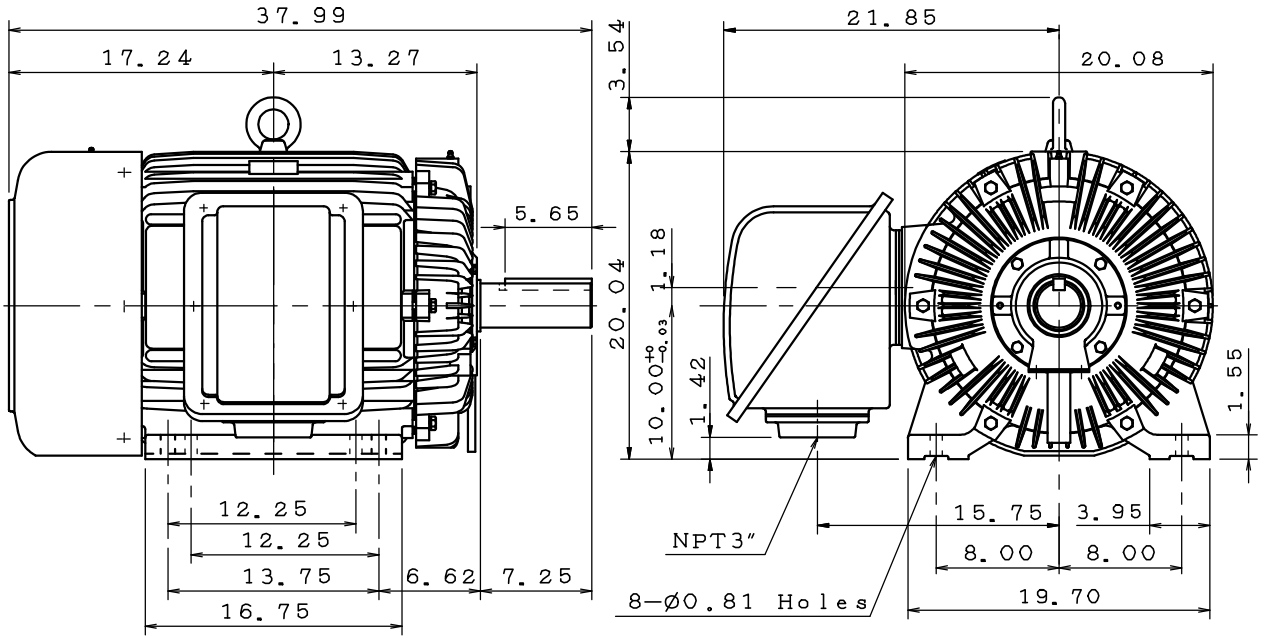

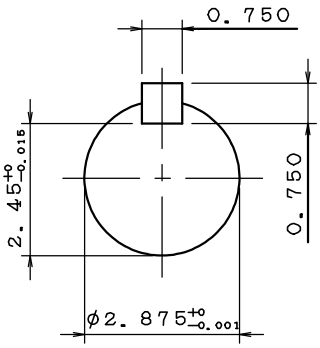

DWG.	C. T. CHEN	12•20•19	TECO Westinghouse	DWG NO. 31057M130030
CHKD.	M. C. JENG	01•15•20		
APPD.	M. C. JENG	01•15•20		