DATE Sept. 25, 2006	OUTLINE DIMENSIONS	MOTOR TYPE: AEHH8N-CF
Cat. #: EP0754C	3-PHASE INDUCTION MOTOR	FRAME NO. 365TC

Pole	HP	kW	Hz	VOLT	Syn. Speed r/min(rpm)
4	75	56	60	230/460	1800

Ins	Rating	Dimension in	Approx Weight	Bearings	
F	CONT.	inches	951 lbs	DE: 6313	NDE: 6213

Totally Enclosed Fan Cooled Type. Squirrel-cage Rotor.

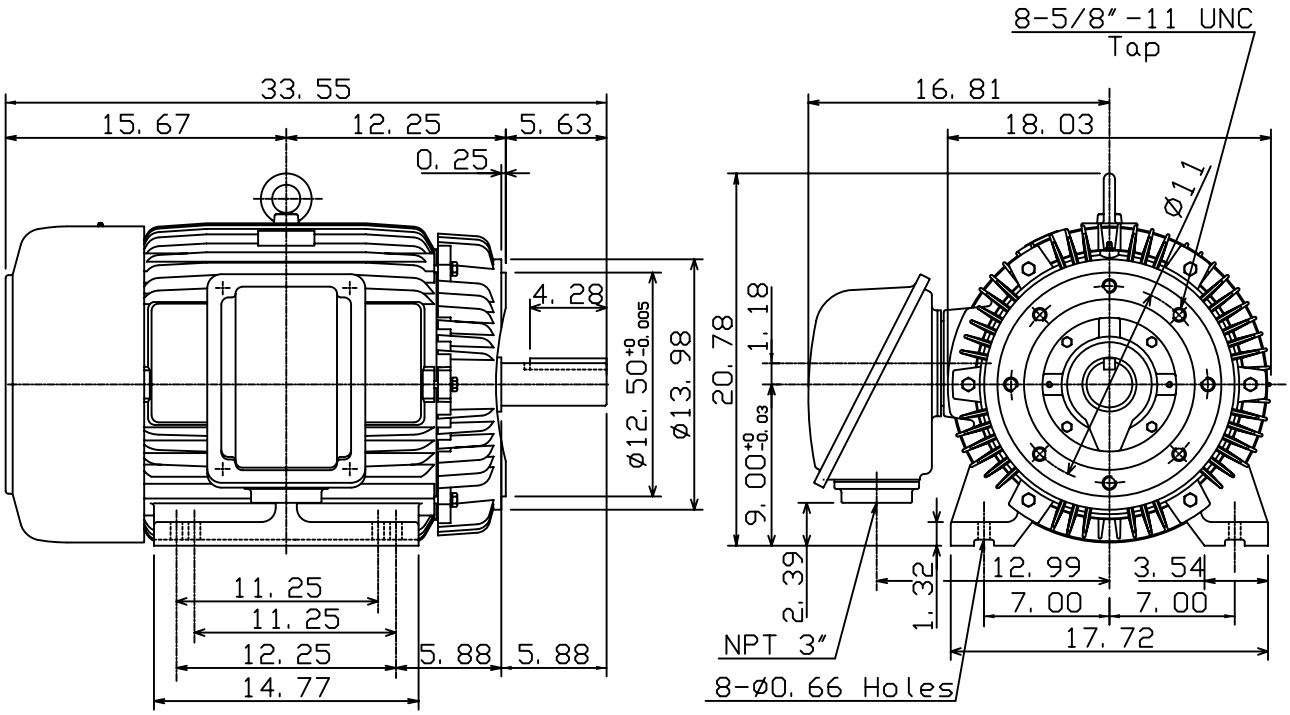

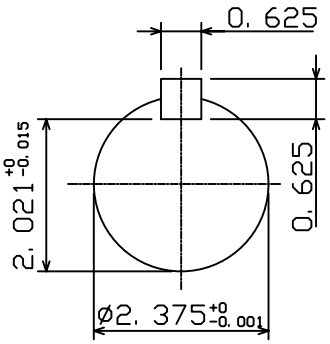

DWN.	K. L. KUO	01·11·05	TECO Westinghouse	DWG NO.
CHKD.	C. H. KAO	01·28·05		31049J715200
APPD.	M. C. TSAI	01·28·05		