DATE Sept. 25, 2006	OUTLINE DIMENSIONS	MOTOR TYPE: AEHH8N-CF
Cat. #: EP0756C	3-PHASE INDUCTION MOTOR	FRAME NO. 405TC

Pole	HP	kW	Hz	VOLT	Syn. Speed r/min(rpm)
6	75	56	60	230/460	1200

Ins	Rating	Dimension in	Approx Weight	Bearings	
F	CONT.	inches	1310 lbs	DE: 6317	NDE: 6313

Totally Enclosed Fan Cooled Type. Squirrel-cage Rotor.

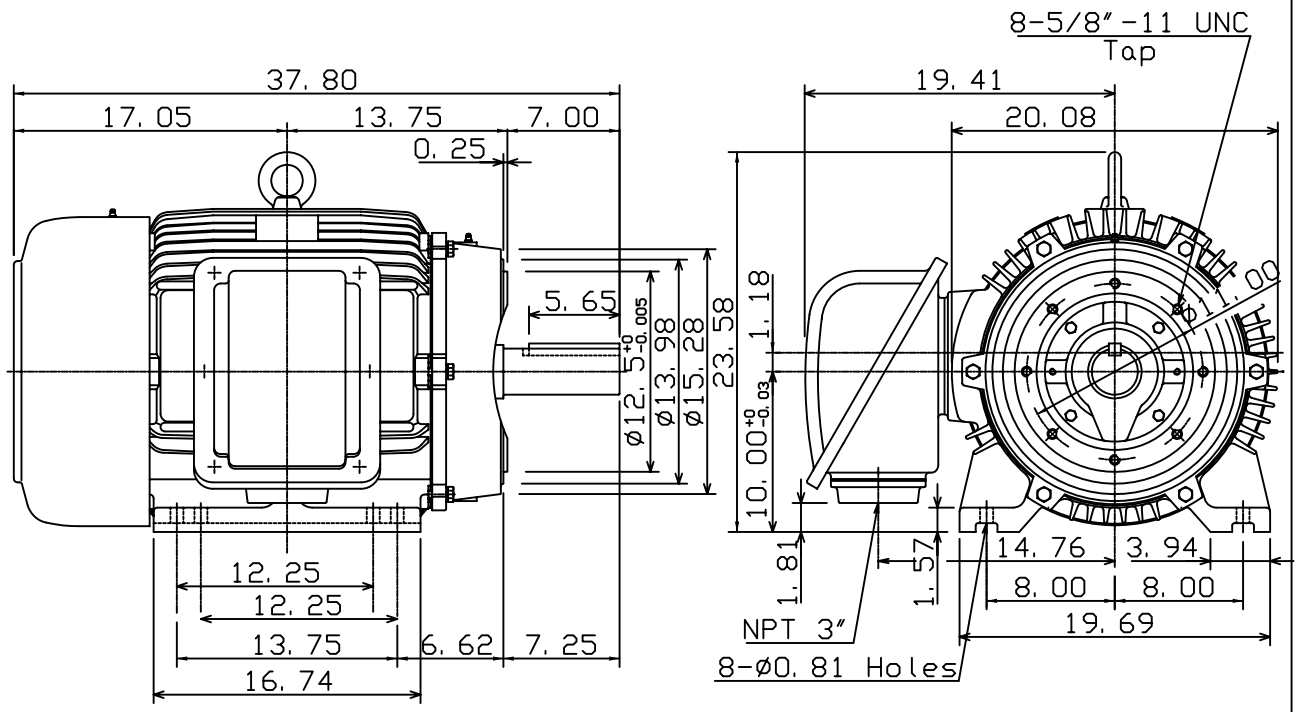

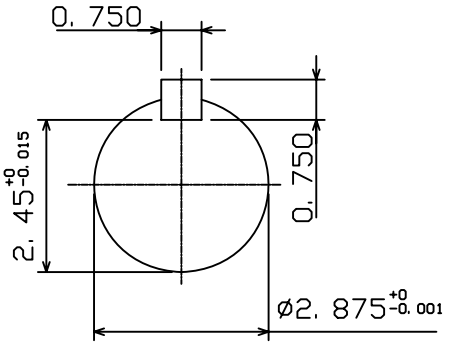

DWN.	K. L. KUO	01·11·05	TECO Westinghouse
CHKD.	C. H. KAO	01·28·05	
APPD.	M. C. TSAI	01·28·05	

DWG NO. 31057H373480