TYPE	OUTPUT		POLE	TIME RATING	VOLTAGE V	Hz	SYN.SPEED R.P.M
	HP.	kW.					
AEHH8NCF	150	111.9	4	CONT.	460	60	1800

TOTALLY ENCLOSED FAN-COOLED TYPE. SQUIRREL-CAGE ROTOR

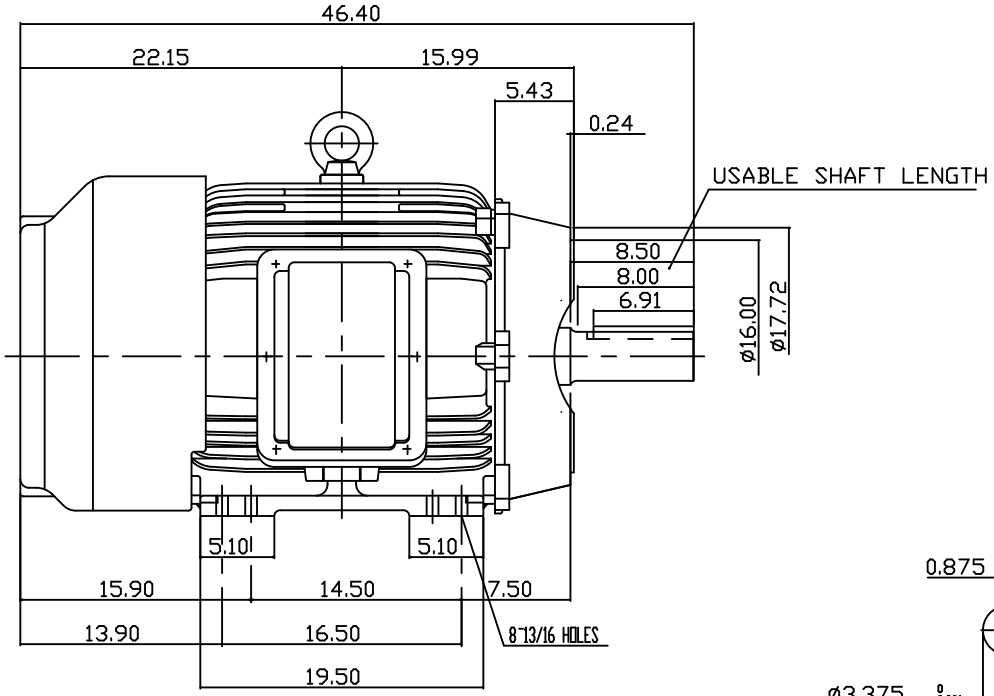

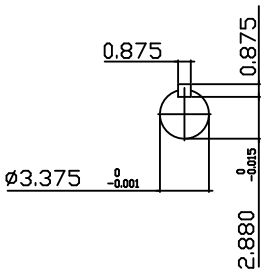

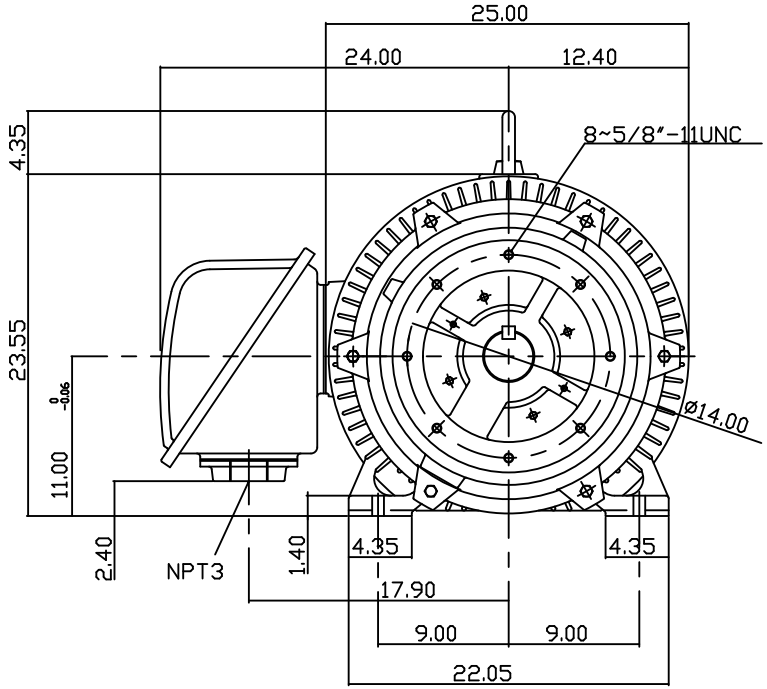

NOTE:

1. DIMENSIONS IN INCH
2. FRAME NO. 445TC
3. F CLASS INSULATION, S.F.1.15
4. FOR DIRECT FLEXIBLE COUPLING
5. ENCLOSURE: IP54
6. BEARING SIZE: DRIVE END: 6318
   NON-DRIVE END: 6316
7. APPROX. WEIGHT: 1900 LBS

DWN.	Y.ZHU	JAN 04 2006
CHKD.	H.HUANG	JAN 04 2006
APPD.	C.WANG	JAN 04 2006

DATE July, 31, 2013

Catalog # EP1504C

OUTLINE DIMENSIONS

3-PHASE INDUCTION MOTOR

TECO Westinghouse

DWG NO. 3B040C729

REV: 00

TW-56C