POLE	HP	kW	Hz	VOLT	r/min(RPM)	INS	RATING	DIMENSION IN	APPROX WEIGHT	BEARINGS
8	200	149	60	460	900	F	CONT.	INCH	2598lbs	DE: 6320 NDE: 6316

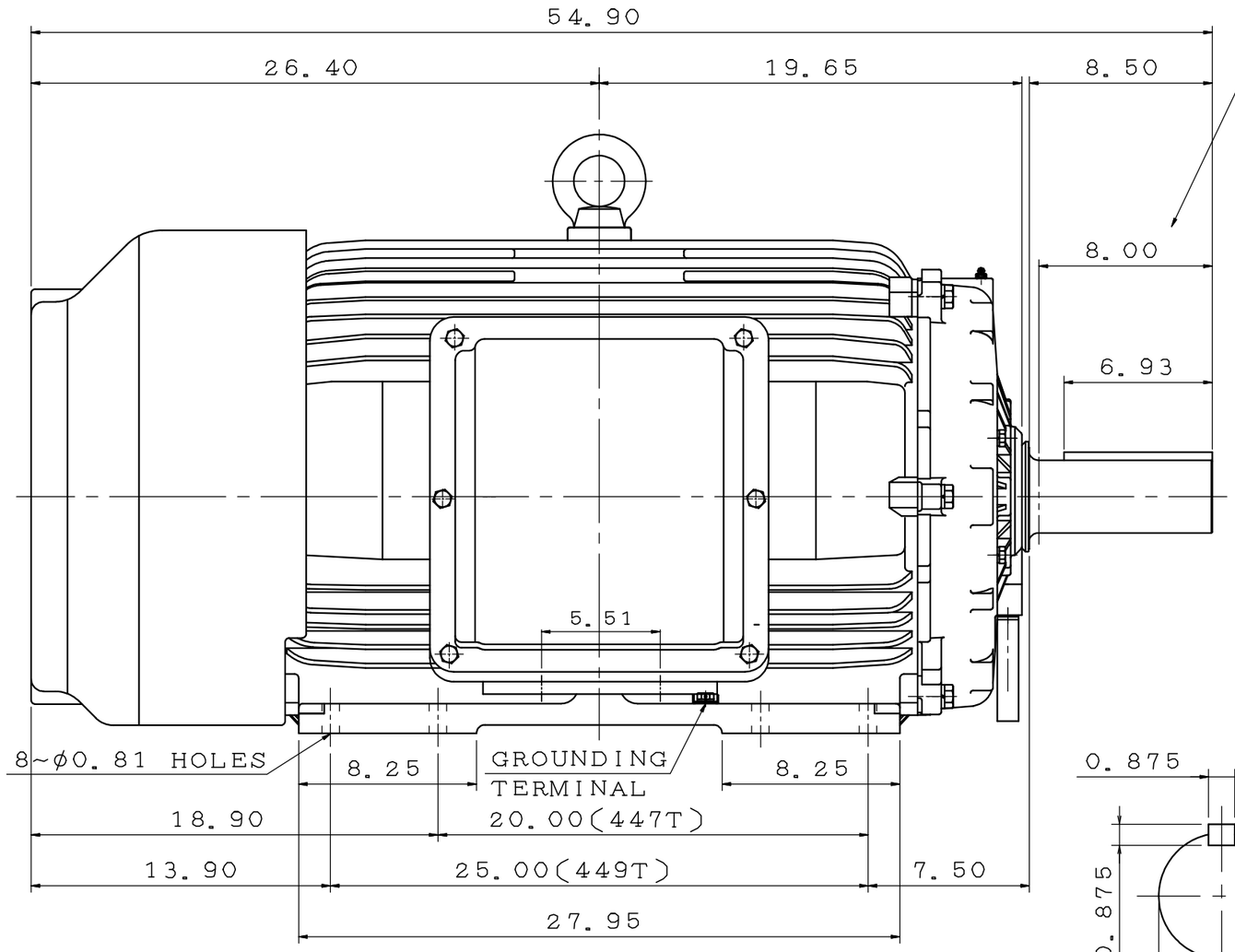

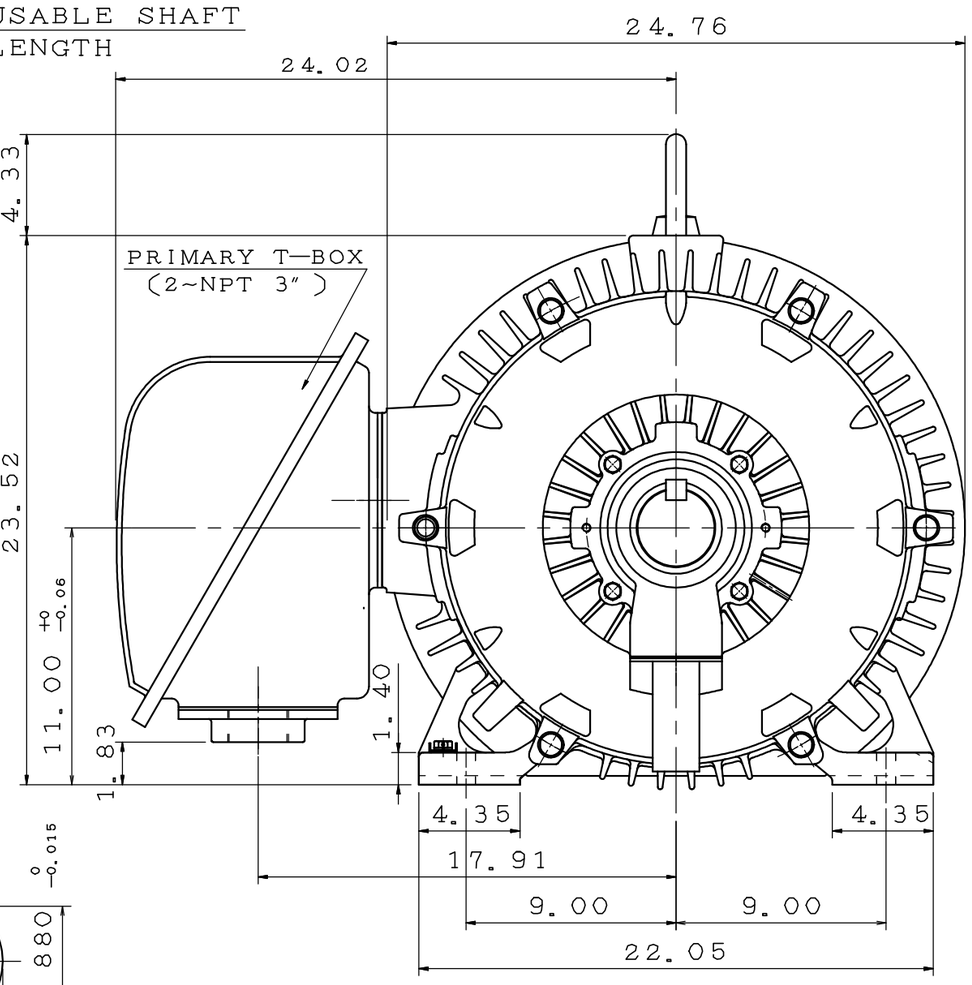

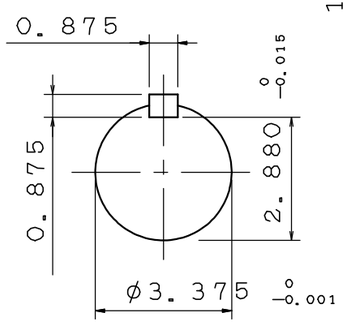

SHAFT END
ENLARGED VIEW

NOTE:
1. FOR DIRECT FLEXIBLE COUPLING
2. ENCLOSURE: IP55 PROTECTION

OUTLINE DIMENSIONS
3—PHASE INDUCTION MOTOR

MOTOR TYPE	AEHH8N	FRAME NO.	449T
CATALOG NO:	EP2008T	DATE	APRIL 1, 2020

APPD.	BEN. YANG	06•19•19
CHKD.	K. L. KUO	06•19•19
DWG.	K. L. KUO	06•15•19

TECO Westinghouse

DWG NO. 31057C578270

第三角法