TYPE	OUTPUT		POLE	TIME RATING	VOLTAGE V	Hz	SYN.SPEED R.P.M
	HP.	kW.					
AEHH8N	200	149	8	CONT.	460	60	900

TOTALLY ENCLOSED FAN-COOLED TYPE. SQUIRREL-CAGE ROTOR

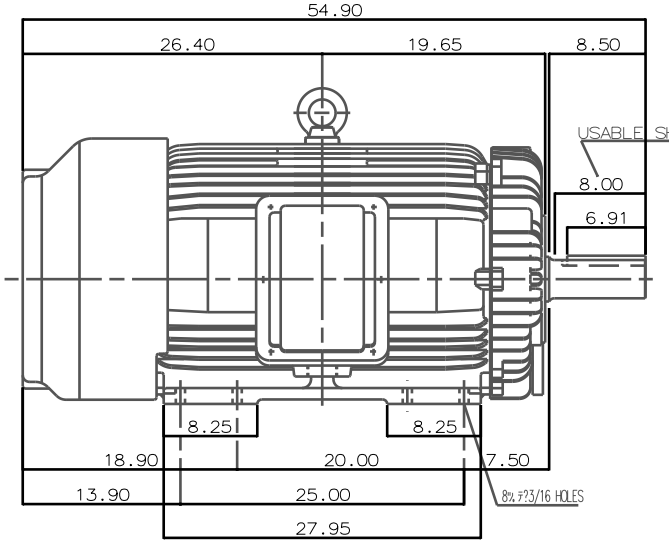

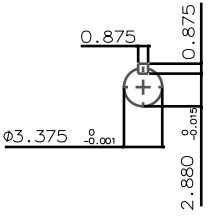

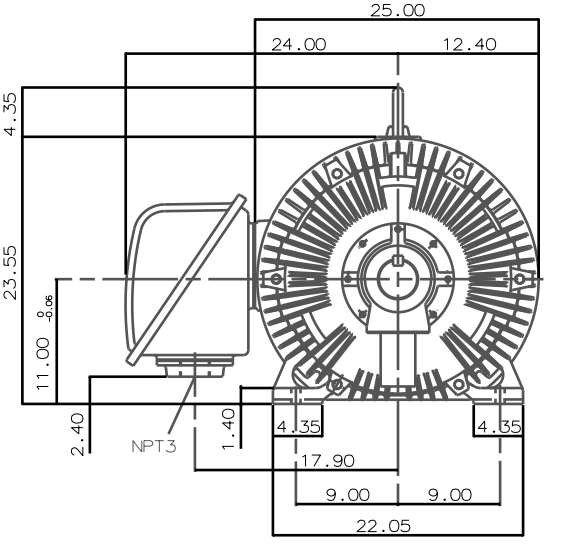

NOTE:

1. DIMENSIONS IN INCH
2. FRAME NO. 449T
3. F CLASS INSULATION, S.F.1.15
4. FOR DIRECT FLEXIBLE COUPLING
5. ENCLOSURE: IP54
6. BEARING SIZE: DRIVE END: NU6320
   NON-DRIVE END: 6316
7. APPROX. WEIGHT: 2706 LBS

DWN.	J.WANG	JAN·28·2005
CHKD.	H.HUANG	JAN·28·2005
APPD.	C.WANG	JAN·28·2005

DATE 20050616

CATALOG # EP2008TR

OUTLINE DIMENSIONS

3-PHASE INDUCTION MOTOR

TECO Westinghouse

DWG NO. 3A040Y647 REV: 00

TW-56C