DATE: April 16, 2012	OUTLINE DIMENSIONS	MOTOR TYPE: AEGHCF
CATALOG # GH0014C	3-PHASE INDUCTION MOTOR	FRAME NO. 56C

Pole	HP	kW	Hz	VOLT	rpm/min
4	1	.75	60	230/460	1800

Ins	Rating	Dimension in	Approx Weight	Bearings
F	CONT.	inch.	27	DE: 6205ZZ NDE: 6204ZZ

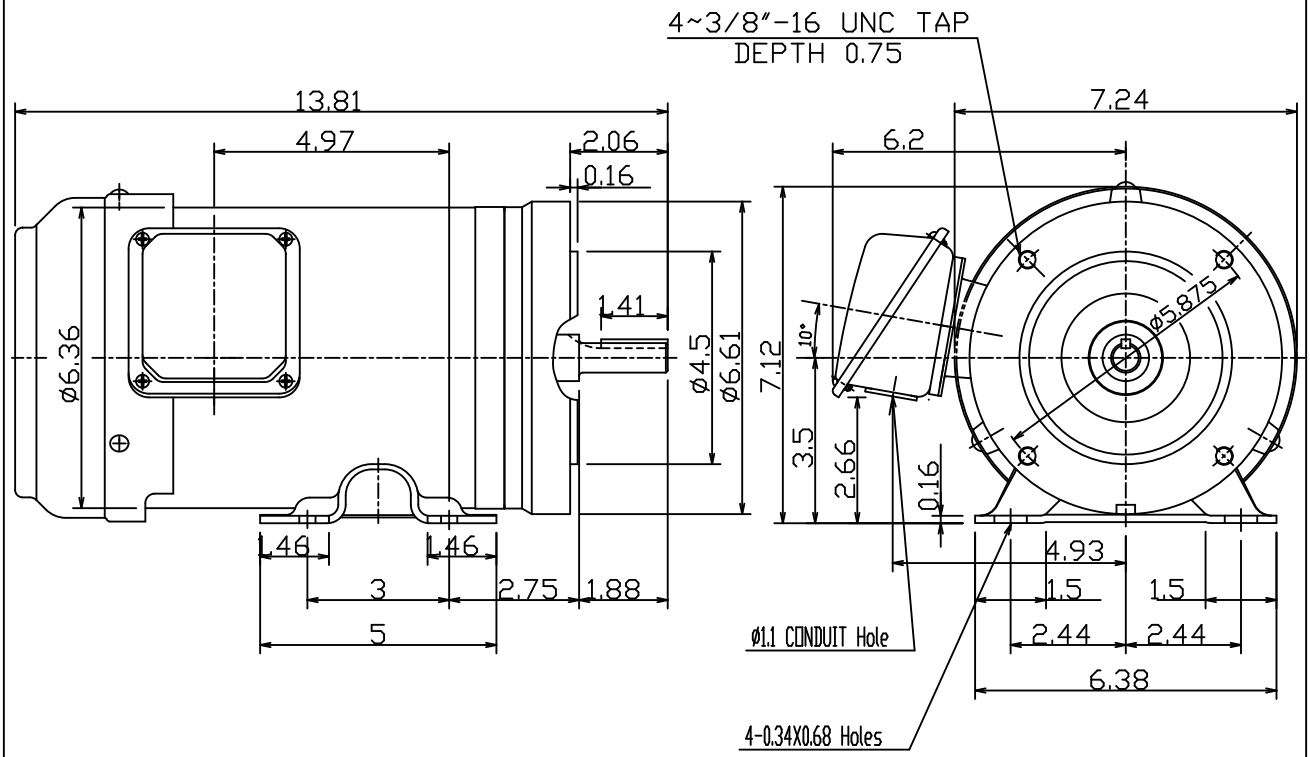

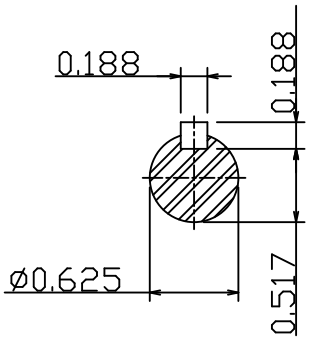

0	.		.	

DWN.	陳奕元	03-01-11	TECO Westinghouse	DWG NO.
CHKD.	陳敬元	03-01-11		31049Z107990
APPD.	蔡明◇×	03-01-11		