DATE FEBRUARY 16, 2013	OUTLINE DIMENSIONS	MOTOR TYPE: AEGHCF
CATALOG # GH0/72C	3-PHASE INDUCTION MOTOR	FRAME NO. 56C

Pole	HP	kW	Hz	VOLT	r/min
2	.75	.56	60	230/460	3600

Ins	Rating	Dimension in	Approx Weight	Bearings
F	CONT.	inch.	30	DE: 6204ZZ NDE: 6203ZZ

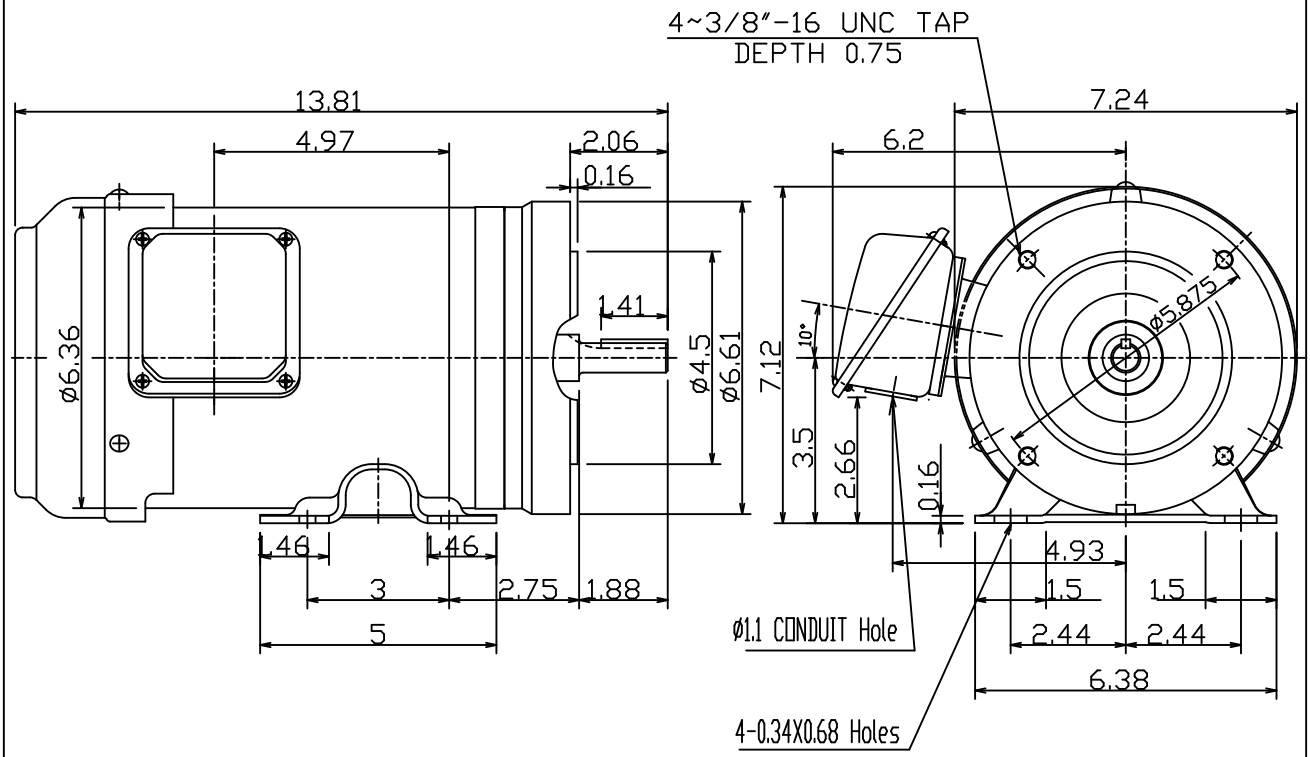

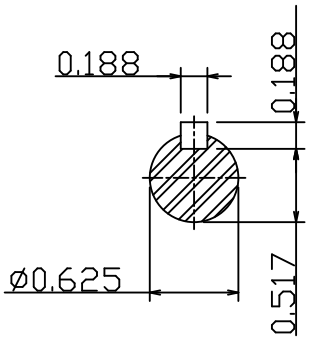

0	.		.	

DWN.	陳奕元	03 ·01 11	TECO Westinghouse	DWG NO.
CHKD.	陳敬元	03 ·01 11		31049Z107990
APPD.	蔡明◇×	03 ·01 11		