DATE: January 16, 2013	OUTLINE DIMENSIONS	MOTOR TYPE: AEGHCF
CATALOG # GH1/52C	3-PHASE INDUCTION MOTOR	FRAME NO. 56C

Pole	HP	kW	Hz	VOLT	rpm/min
2	1.5	1.11	60	230/460	3600

Ins	Rating	Dimension in	Approx Weight	Bearings
F	CONT.	inch.	27	DE: 6205ZZ NDE: 6204ZZ

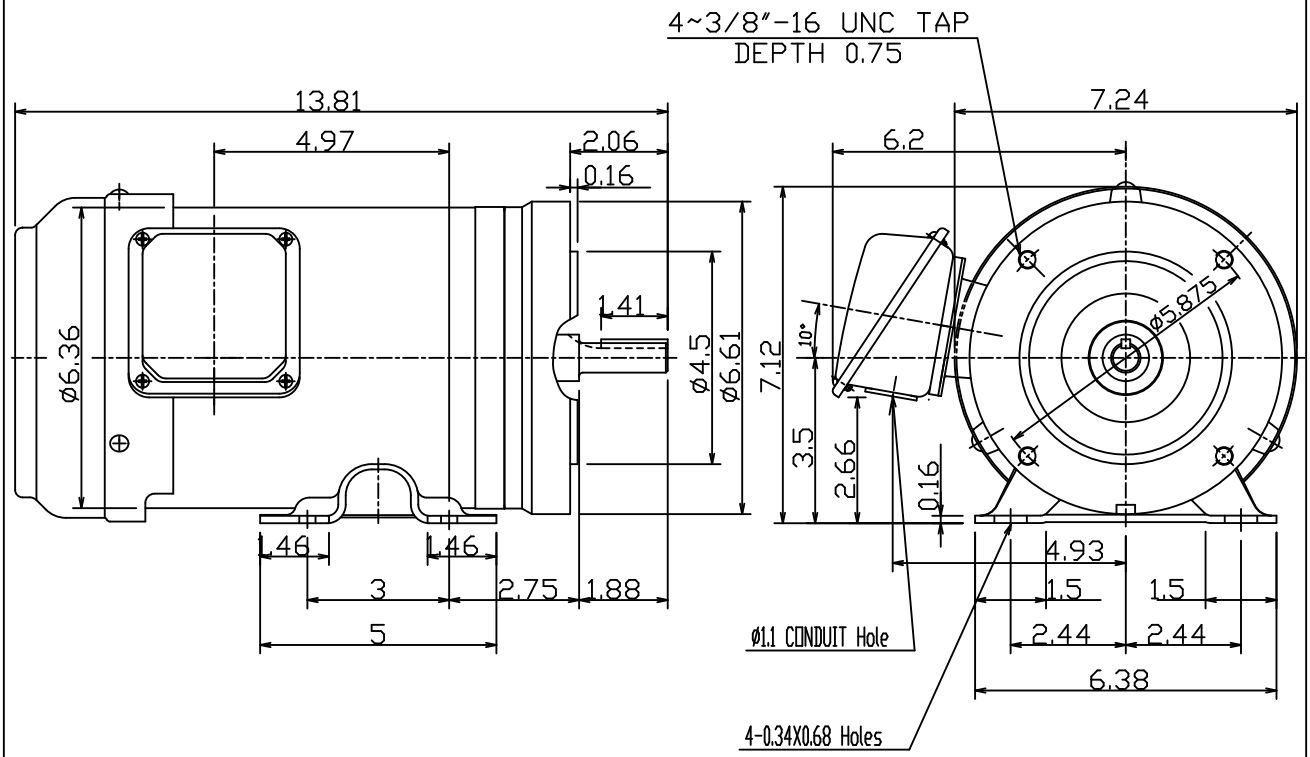

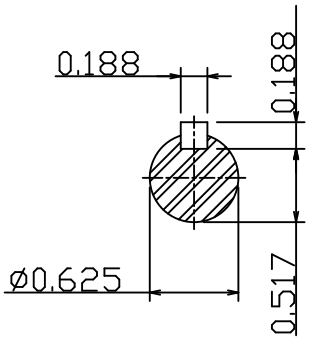

DWN.		03-01-11	TECO Westinghouse	DWG NO. 31049Z107990
CHKD.		03-01-11		
APPD.		03-01-11		