DATE OCTOBER 30, 2014	OUTLINE DIMENSIONS	MOTOR TYPE: AEGH-CF
CAT. #: GP0016C	3-PHASE INDUCTION MOTOR	FRAME NO. 145TC

Pole	HP	kW	Hz	VOLT	Syn.Speed r/min(rpm)
6	1	.75	60	230/460	1200

Ins	Rating	Dimension in	Approx Weight	Bearings
F	CONT.	inch.	40	DE: 6205ZZ NDE: 6204ZZ

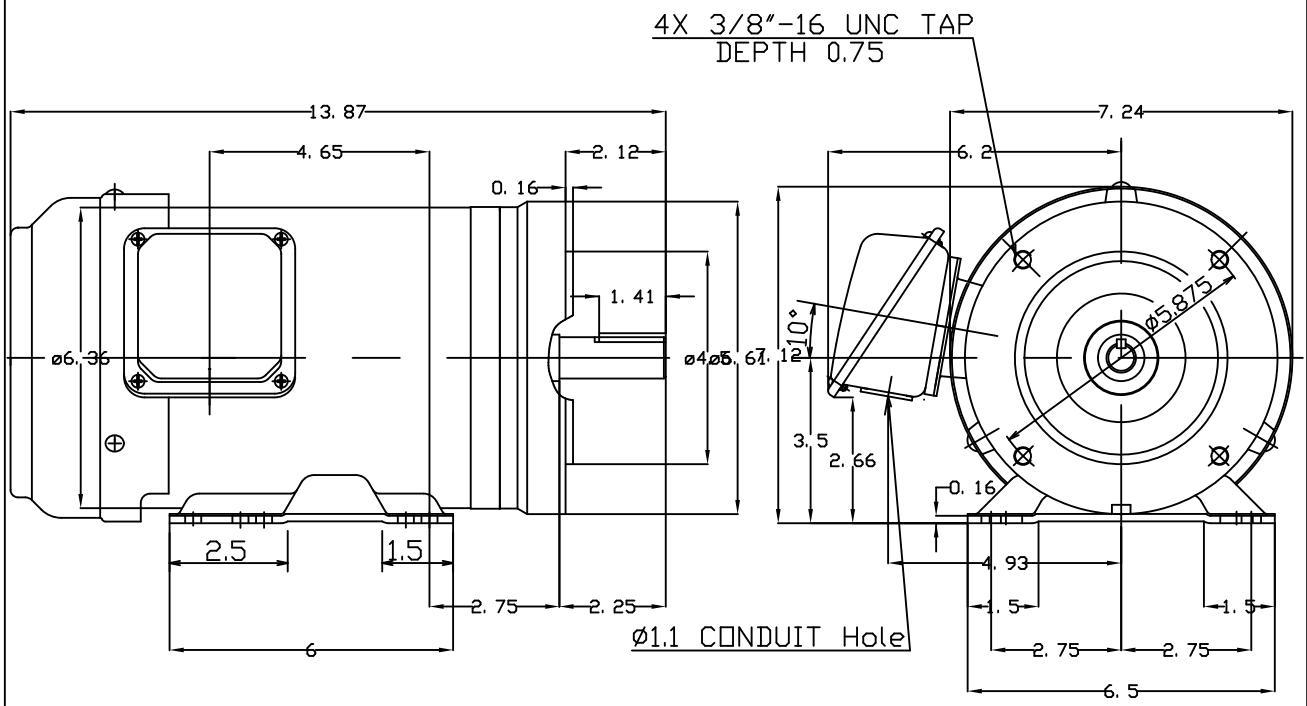

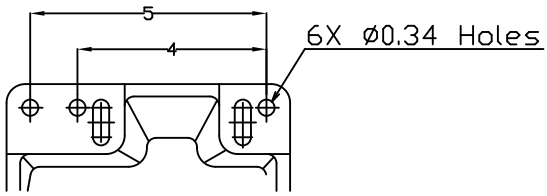

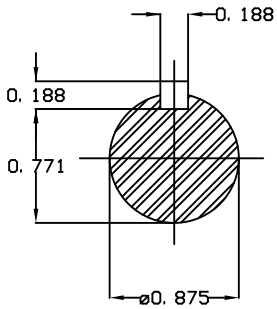

0				

DWN.	Y.Y.CHEN	09-22-09	TECO Westinghouse	DWG NO.
CHKD.	C.Y.CHEN	09-23-09		31049Z107480
APPD.	M.C.TSAI	09-23-09		