DATE OCTOBER 29, 2009	OUTLINE DIMENSIONS	MOTOR TYPE: AETHCF
CAT. #: GPV0026C	3-PHASE INDUCTION MOTOR	FRAME NO. 184TC

Pole	HP	kW	Hz	VOLT	Syn.Speed r/min(rpm)
6	2	1.5	60	230/460	1200

Ins	Rating	Dimension in	Approx Weight	Bearings
F	CONT.	inches	97 lbs.	DE:6206ZZC3 NDE:6205ZZC3

Totally Enclosed Fan-Cooled Type. Squirrel-Cage Rotor.

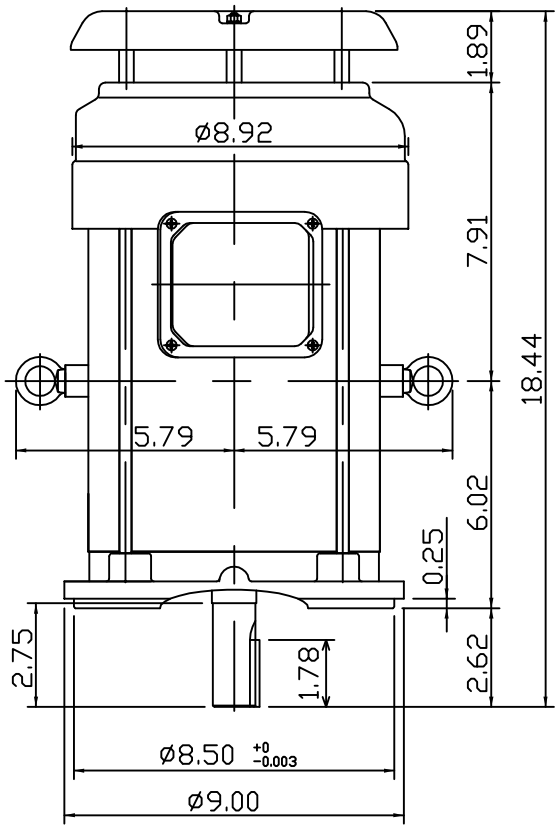

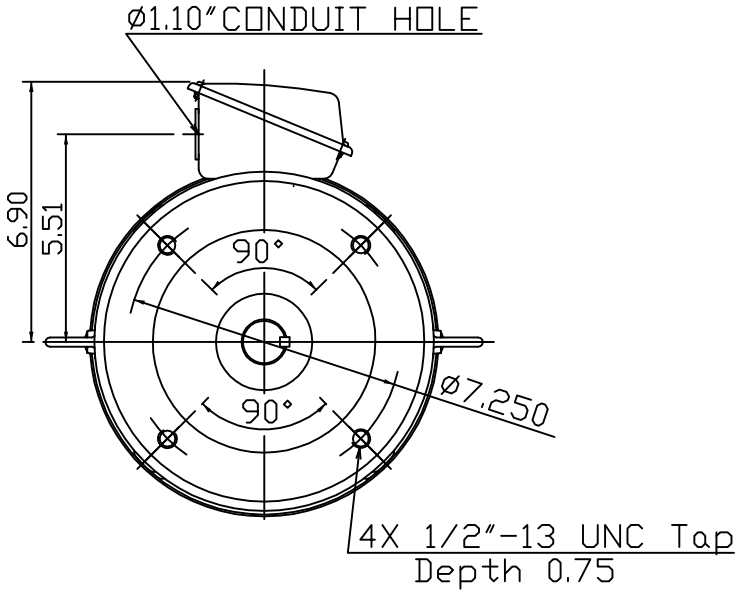

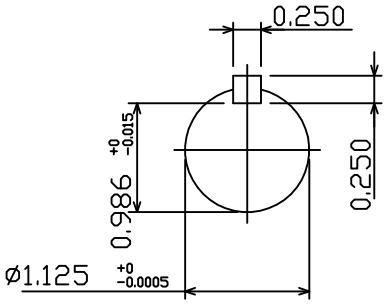

0				

DWN.	Y.S.LIN	10 04 09	TECO Westinghouse	DWG NO.
CHKD.	J.H.LIANG	10 06 09		31049R194010
APPD.	M.C.TSAI	10 06 09		