DATE OCTOBER 29, 2009	OUTLINE DIMENSIONS	MOTOR TYPE: AETHCF
CAT. #: GPV7/52C	3-PHASE INDUCTION MOTOR	FRAME NO. 213TC

Pole	HP	kW	Hz	VOLT	Syn.Speed r/min(rpm)
2	7.5	5.6	60	230/460	3600

Ins	Rating	Dimension in	Approx Weight	Bearings
F	CONT.	inches	140 lbs.	DE: 6208ZZC3 NDE: 6206ZZC3

Totally Enclosed Fan-Cooled Type. Squirrel-Cage Rotor.

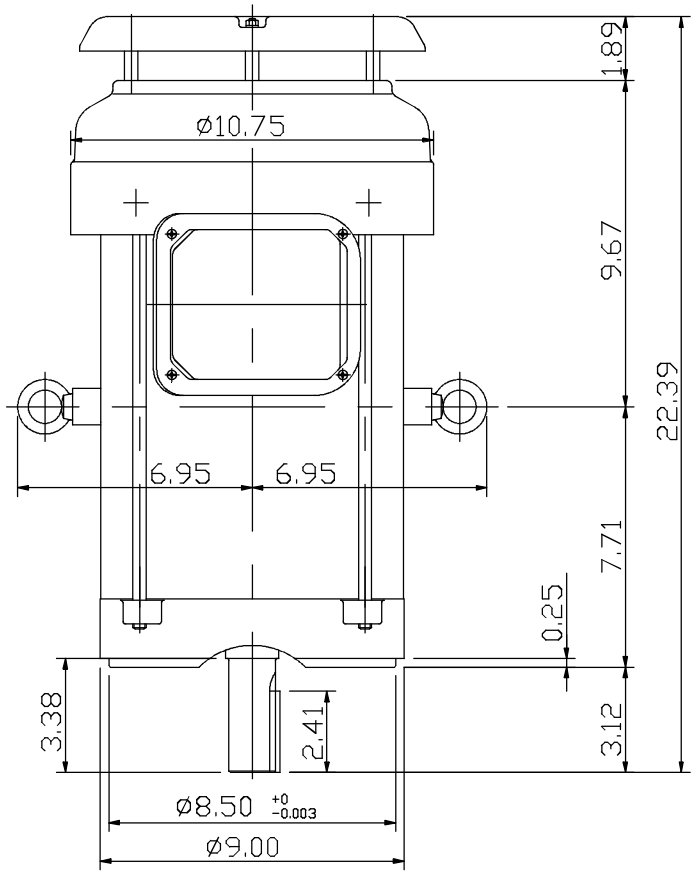

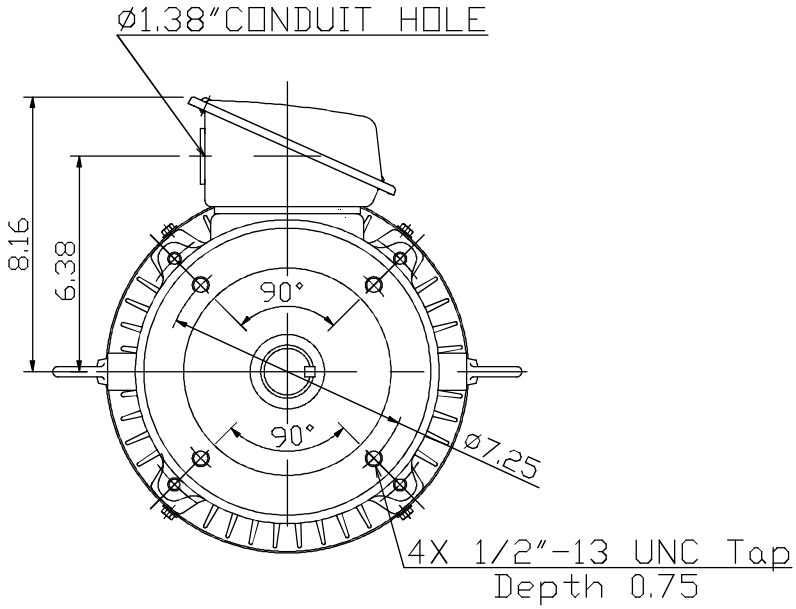

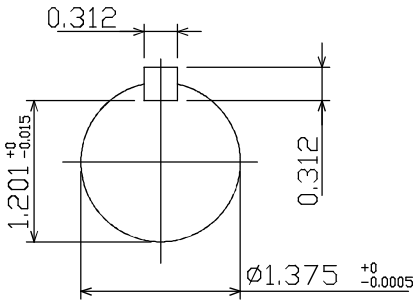

0				

DWN.	Y.S.LIN	10 01 09	TECO Westinghouse	DWG NO.
CHKD.	J.H.LIANG	10 06 09		31049R195010
APPD.	M.C.TSAI	10 06 09		