DATE January 20, 2009	OUTLINE DIMENSIONS	MOTOR TYPE: AEHH8B-CF
CAT. #:	3-PHASE INDUCTION MOTOR	FRAME NO. 326TSC

Pole	HP	kW	Hz	VOLT	Syn.Speed r/min(rpm)
2					

Ins	Rating	Dimension in	Approx Weight	Bearings
F	CONT.	inches	710 LBS	DE: 6312ZC3 NDE: 6212ZC3

Totally Enclosed Fan Cooled Type. Squirrel-Cage Rotor.

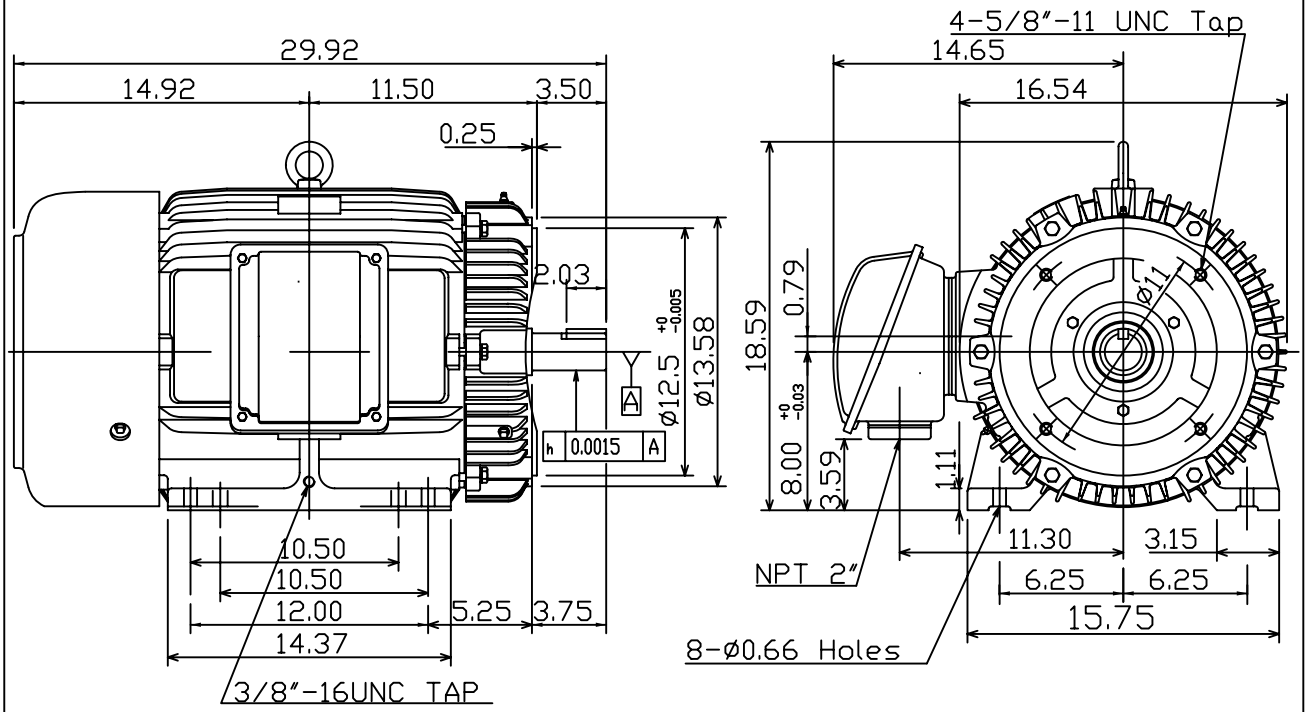

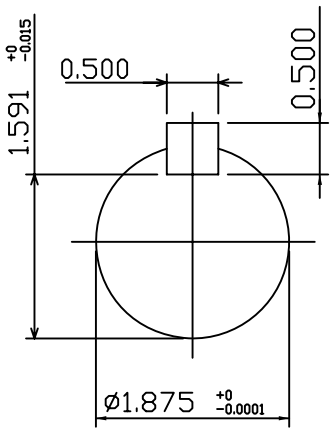

Note:
1. Motor Vibration:15?
2. Inpro/Seal in Both End Brackets

0			

DWN.	K.L.KUO	01·19·05	TECO Westinghouse	DWG NO.
CHKD.	C.H.KAO	02·01·05		31049M630190
APPD.	M.C.TSAI	02·01·05		