| DATE January 20, 2009 | OUTLINE DIMENSIONS | MOTOR TYPE: AEHH8B-CF |
|---|---|---|
| CAT. #: | 3-PHASE INDUCTION MOTOR | FRAME NO. 365TC |

| Pole | HP | kW | Hz | VOLT | Syn. Speed r/min(rpm) |
|---|---|---|---|---|---|
| 4/6/8 | . | . | . | . | |

| Ins | Rating | Dimension in | Approx Weight | Bearings |
|---|---|---|---|---|
| F | CONT. | inches | 951 LBS | DE: 6313ZC3 NDE: 6213ZC3 |

Totally Enclosed Fan Cooled Type. Squirrel-cage Rotor.

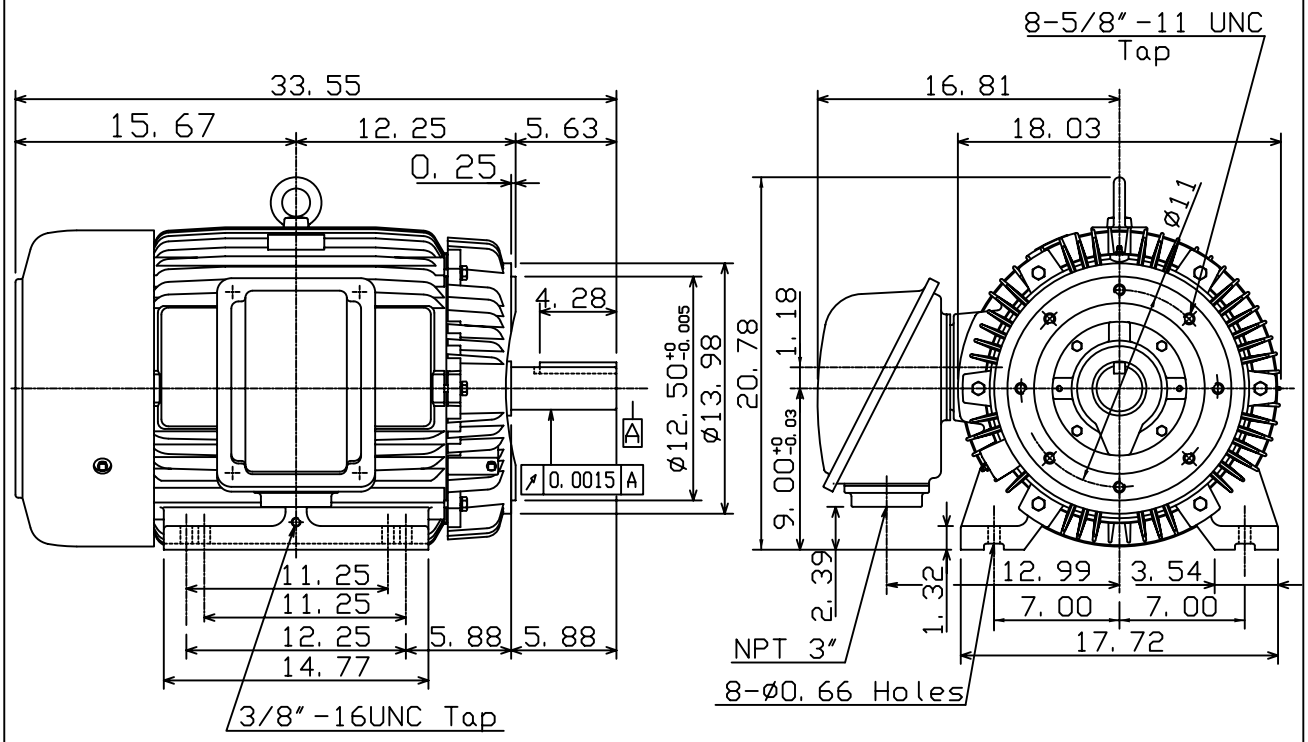


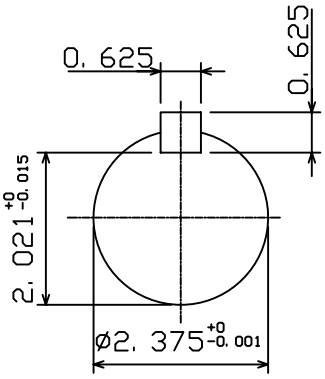


Note:
1. Motor Vibration: 10μ.
2. Inpro/Seal in Both End Brackets

| | | | |
|---|---|---|---|
| 0 | | | |

| | | | | |
|---|---|---|---|---|
| DWN. | K. L. KUO | 01-19-05 | TECO Westinghouse | DWG NO. |
| CHKD. | C. H. KAO | 02-01-05 | | 31049M632590 |
| APPD. | M. C. TSAI | 02-01-05 | | |