DATE Sept. 12, 2005	OUTLINE DIMENSIONS	MOTOR TYPE: AEHH
CAT. #: HH0504-50	3-PHASE INDUCTION MOTOR	FRAME NO. 326T

Pole	HP	kW	Hz	VOLT	Syn. Speed r/min(rpm)
4	50	37.3	50	380	1500

Ins	Rating	Dimension in	Approx Weight	Bearings
F	CONT.	inch	675 lbs.	DE: 6312ZC3 NDE: 6212ZC3

Totally Enclosed Fan-Cooled Type. Squirrel-Cage Rotor.

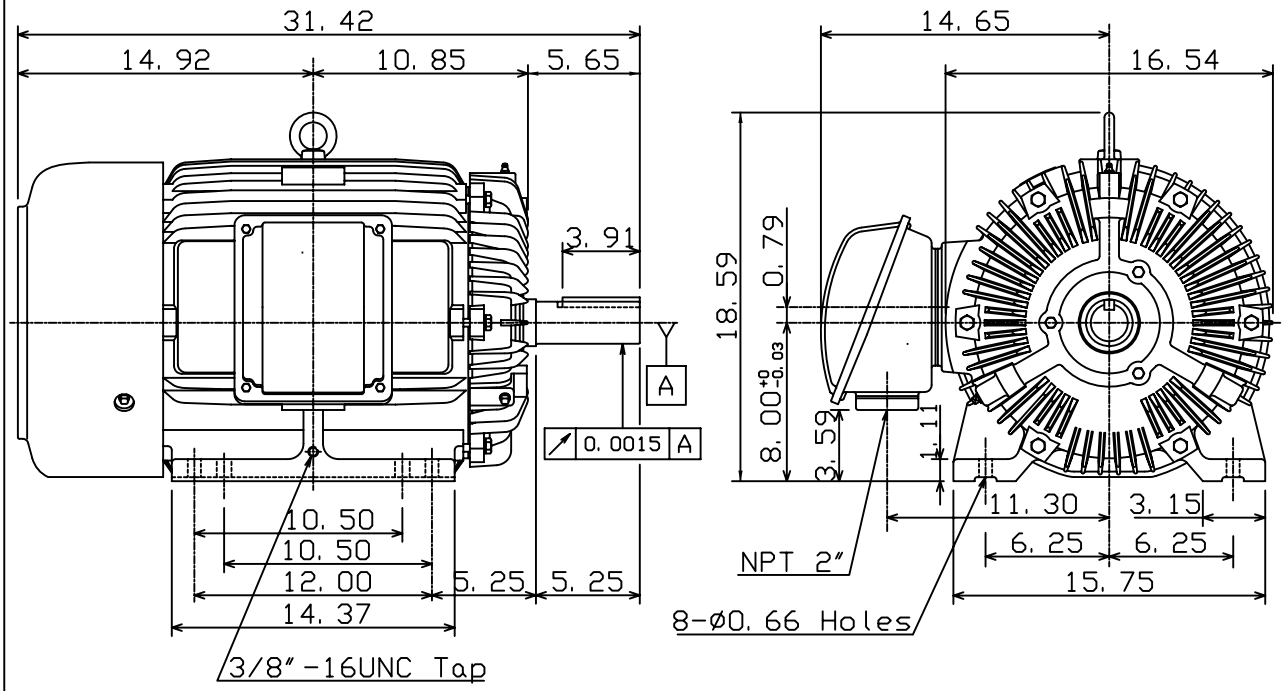

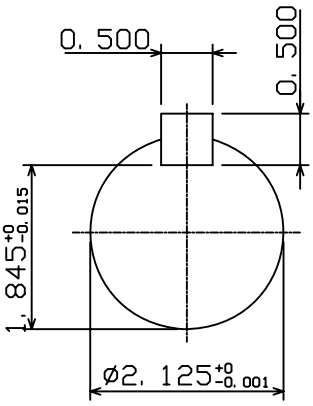

0			

DWN.	K. L. KUO	01-15-05	TECO Westinghouse	DWG NO.
CHKD.	C. H. KAO	02-02-05		31049M630120
APPD.	M. C. TSAI	02-02-05		