DATE NOV 1, 2016	OUTLINE DIMENSIONS	MOTOR TYPE: AEHH8NJMP
cat. #: JMP0032	3-PHASE INDUCTION MOTOR	FRAME NO. 182JM

Pole	HP	kW	Hz	VOLT	Syn. Speed r/min(rpm)
2	3	2.2	60	230/460	3600

Ins	Rating	Dimension in	Approx Weight	Bearings
F	CONT.	inches	105 lbs	DE: 6307ZZ NDE: 6306ZZ

Totally Enclosed Fan Cooled Type. Squirrel Cage Rotor.

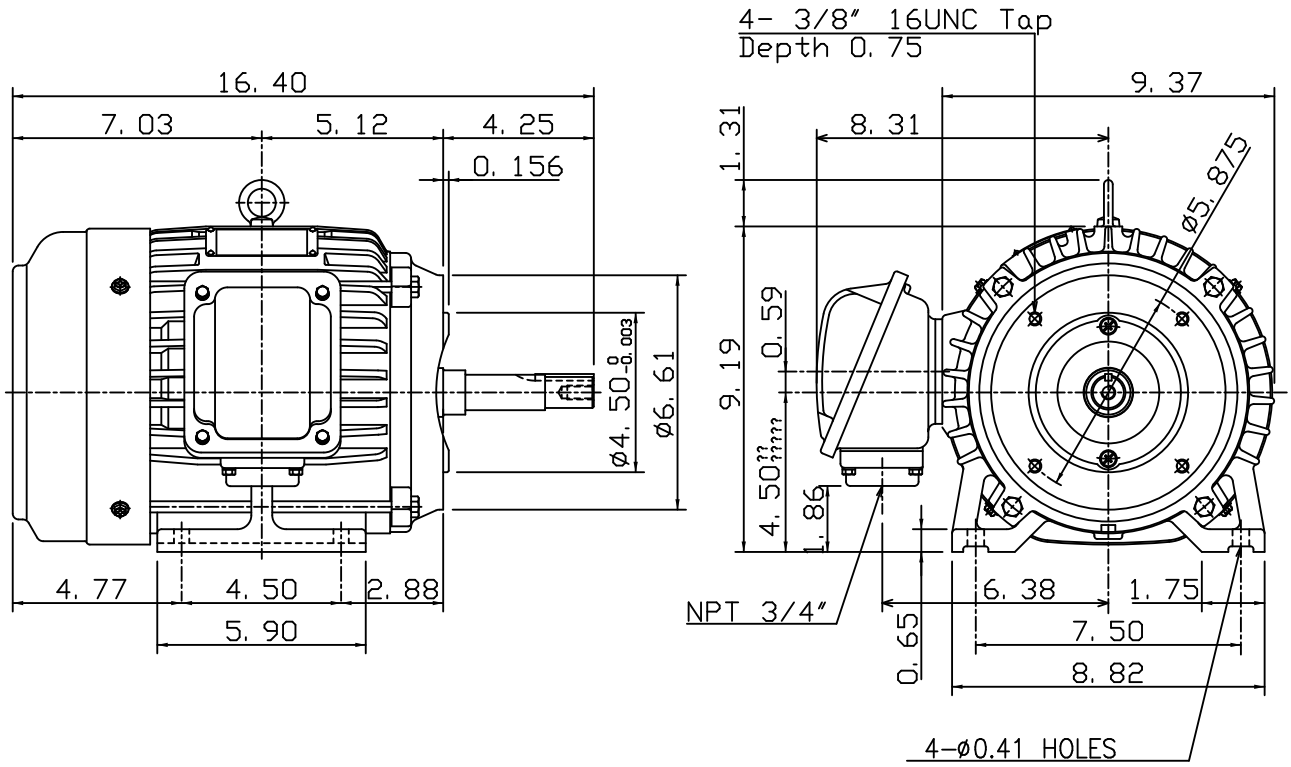

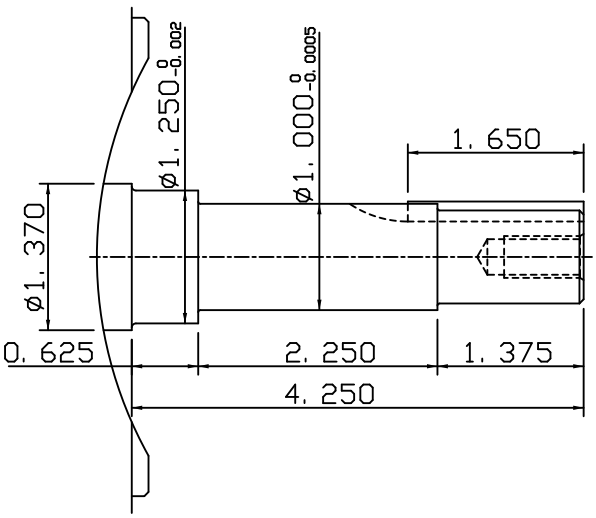

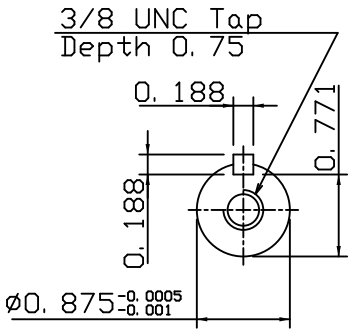

0			

DWN.	J. H. LIANG	01·01·08	TECO Westinghouse	DWG NO.
CHKD.	H. C. YAN	02·12·08		31049H739030
APPD.	M. C. TSAI	02·12·08		