DATE Nov. 1, 2016	OUTLINE DIMENSIONS	MOTOR TYPE: AEHH8NJMP
Cat. #: JMP0102	3-PHASE INDUCTION MOTOR	FRAME NO. 215JM

Pole	HP	kW	Hz	VOLT	Syn. Speed r/min(rpm)
2	10	7.46	60	230/460	3600

Ins	Rating	Dimension in	Approx Weight	Bearings
F	CONT.	inches	178 lbs.	DE: 6309ZZ NDE: 6306ZZ

Totally Enclosed Fan-Cooled Type. Squirrel-Cage Rotor.

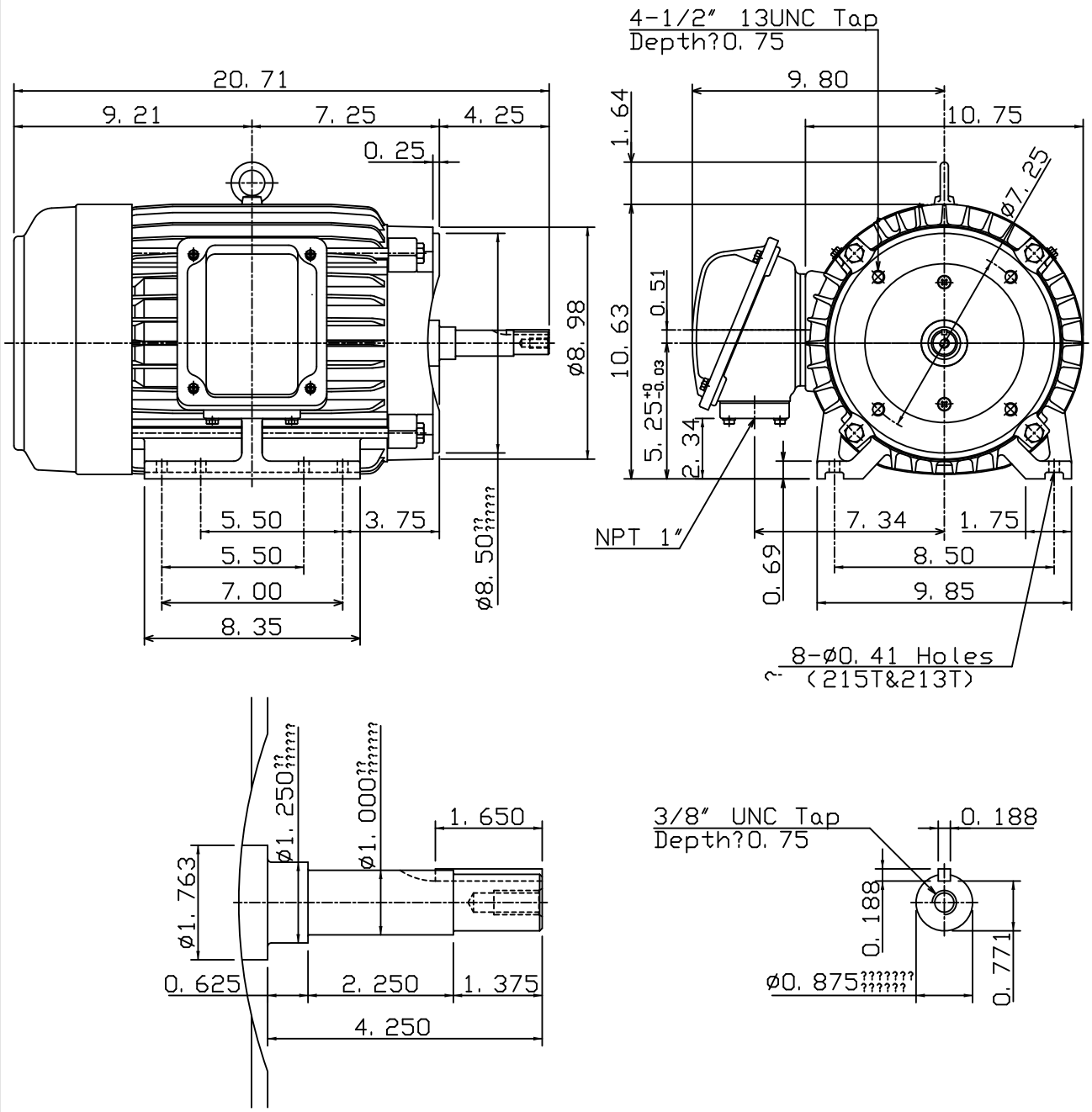

DWN.	J. H. LIANG	01·01·08	TECO Westinghouse
CHKD.	H. C. YAN	02·12·08	
APPD.	M. C. TSAI	02·12·08	

DWG NO. 31049H742030