DATE NOV 1, 2016	OUTLINE DIMENSIONS	MOTOR TYPE: AEHH8NJMP
Cat. #: JMP0154	3-PHASE INDUCTION MOTOR	FRAME NO. 254JM

Pole	HP	kW	Hz	VOLT	Syn. Speed r/min(rpm)
4	15	11.19	60	230/460	1800

Ins	Rating	Dimension in	Approx Weight	Bearings
F	CONT.	inch	270 lbs.	DE: 6309ZZ NDE: 6307ZZ

Totally Enclosed Fan Cooled Squirrel Cage Rotor.

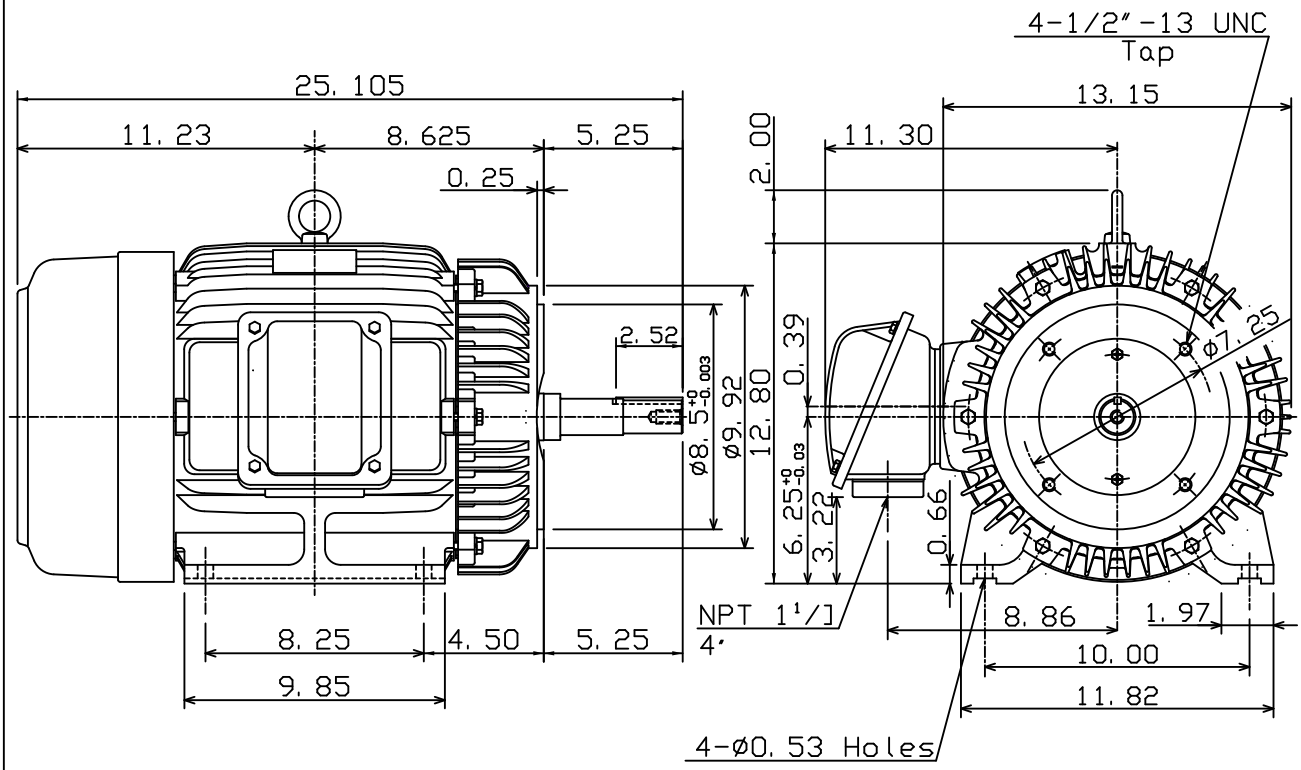

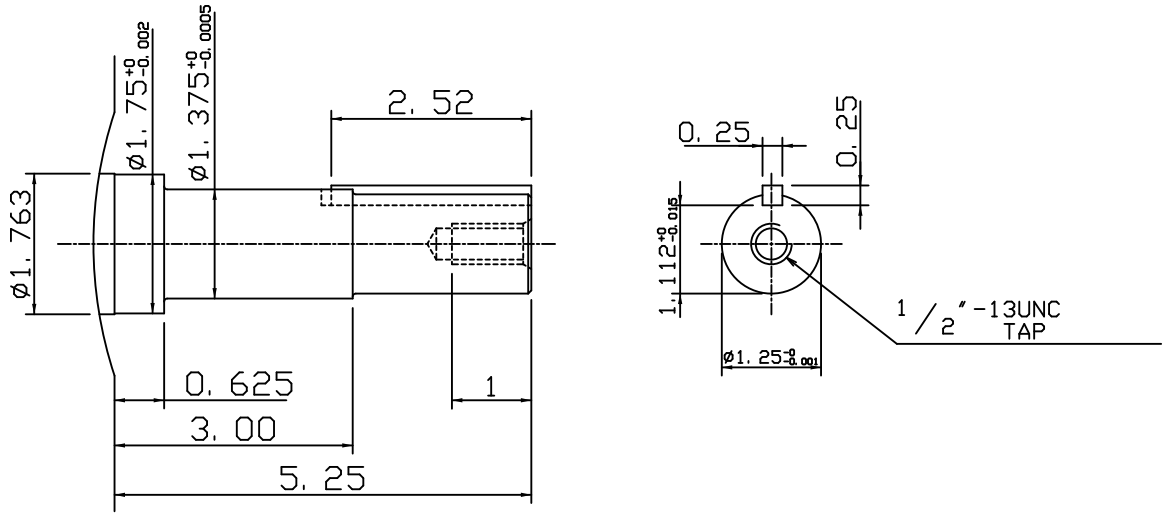

0				

DWN.	K. L. KUO	02-13-08	TECO Westinghouse	DWG NO.
CHKD.	K. L. KUO	02-14-08		31057H255820
APPD.	M. C. TSAI	02-14-08		