DATE Nov. 1, 2016	OUTLINE DIMENSIONS	MOTOR TYPE: AEHH8NJMP
Cat. #: JMP0156	3-PHASE INDUCTION MOTOR	FRAME NO. 284JM

Pole	HP	kW	Hz	VOLT	Syn. Speed r/min(rpm)
6	15	11.19	60	230/460	1200

Ins	Rating	Dimension in	Approx Weight	Bearings	
F	CONT.	inches	420 lbs.	DE: 6311ZZ	NDE: 6310ZZ

Totally Enclosed Fan-Cooled Type. Squirrel-Cage Rotor.

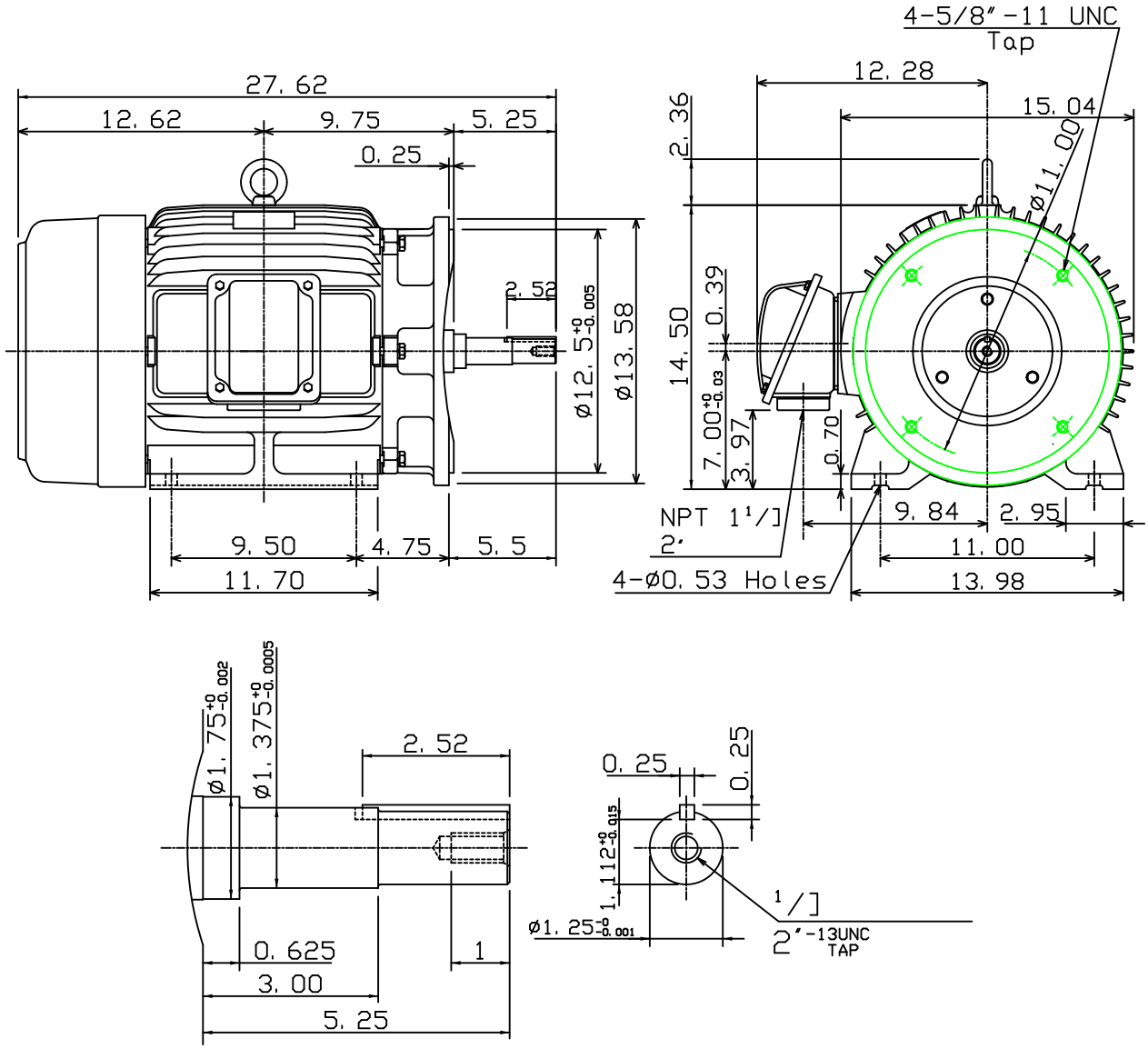

0			

DWN.	K. L. KUO	02-13-08	TECO Westinghouse	DWG NO.
CHKD.	K. L. KUO	02-14-08		31057H206840
APPD.	M. C. TSAI	02-14-08		