| DATE Nov. 1, 2016 | OUTLINE DIMENSIONS | MOTOR TYPE: AEHH8NJMP |
|---|---|---|
| Cat. #: JMP0254 | 3-PHASE INDUCTION MOTOR | FRAME NO. 284JM |

| Pole | HP | kW | Hz | VOLT | Syn. Speed r/min(rpm) |
|---|---|---|---|---|---|
| 4 | 25 | 18.65 | 60 | 230/460 | 1800 |

| Ins | Rating | Dimension in | Approx Weight | Bearings | |
|---|---|---|---|---|---|
| F | CONT. | inches | 420 lbs. | DE: 6311ZZ | NDE: 6310ZZ |

Totally Enclosed Fan-Cooled Type, Squirrel-Cage Rotor.

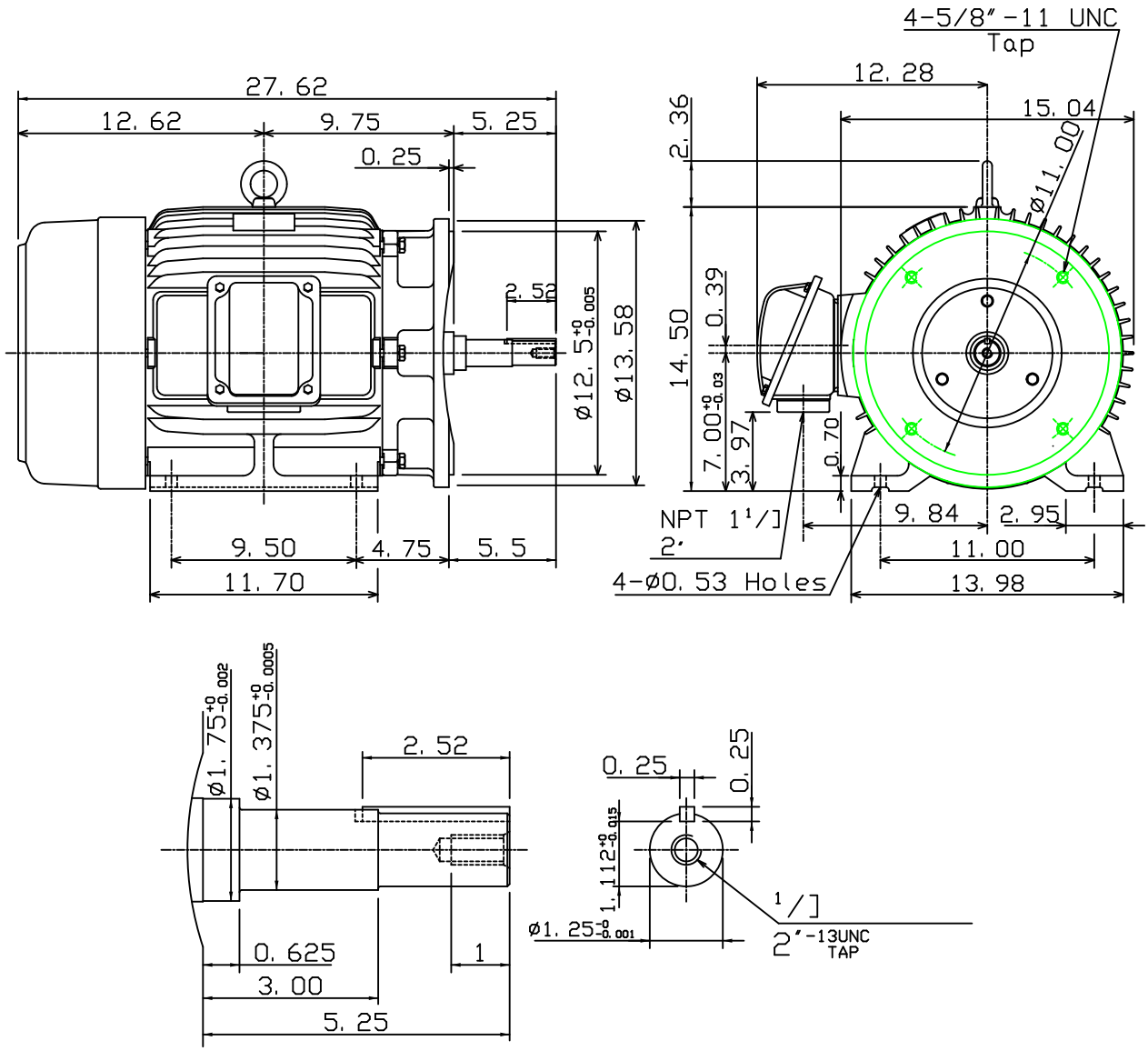


| | | | |
|---|---|---|---|
| 0 | | | |

| | | | | |
|---|---|---|---|---|
| DWN. | K. L. KUO | 02-13-08 | TECO Westinghouse | DWG NO. |
| CHKD. | K. L. KUO | 02-14-08 | | 31057H206840 |
| APPD. | M. C. TSAI | 02-14-08 | | |