DATE Nov. 1, 2016	OUTLINE DIMENSIONS	MOTOR TYPE: AEHH8NJMP
Cat. #: JMP0302	3-PHASE INDUCTION MOTOR	FRAME NO. 286JM

Pole	HP	kW	Hz	VOLT	Syn. Speed r/min(rpm)
2	30	22.38	60	230/460	3600

Ins	Rating	Dimension in	Approx Weight	Bearings
F	CONT.	inches	455 lbs.	DE: 6211C3 NDE: 6211C3

Totally Enclosed Fan-Cooled Type, Squirrel-Cage Rotor.

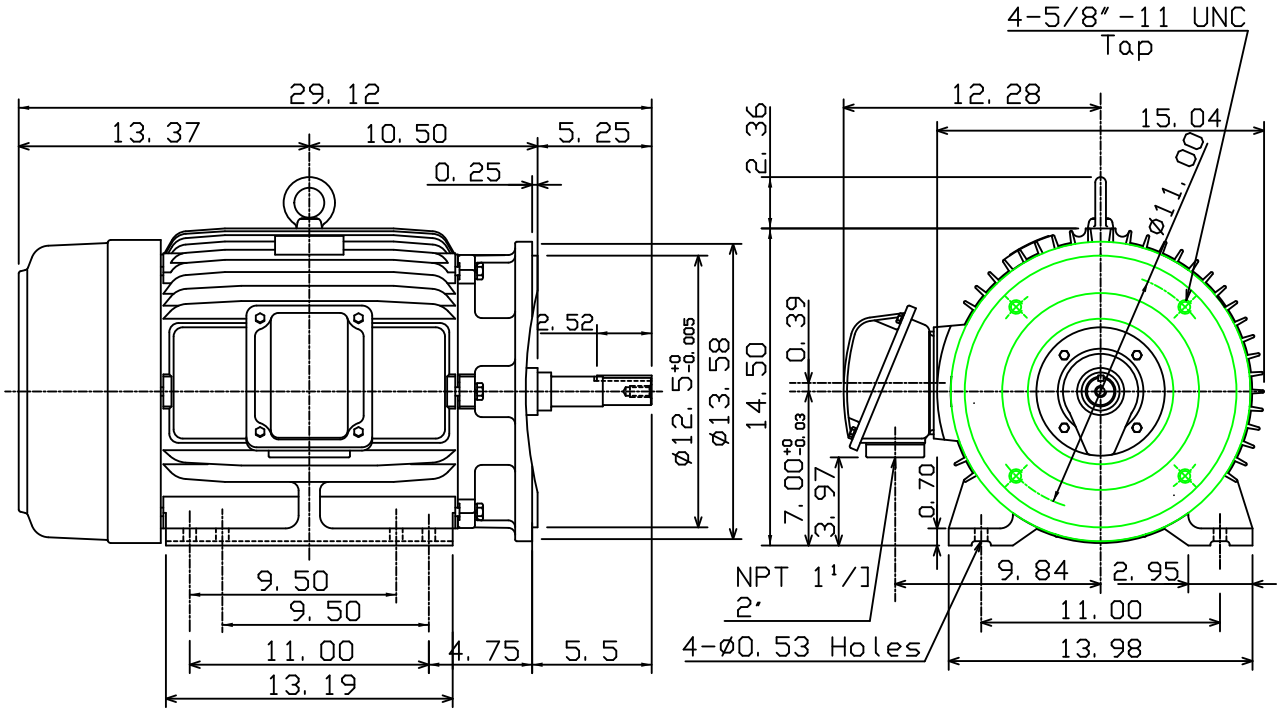

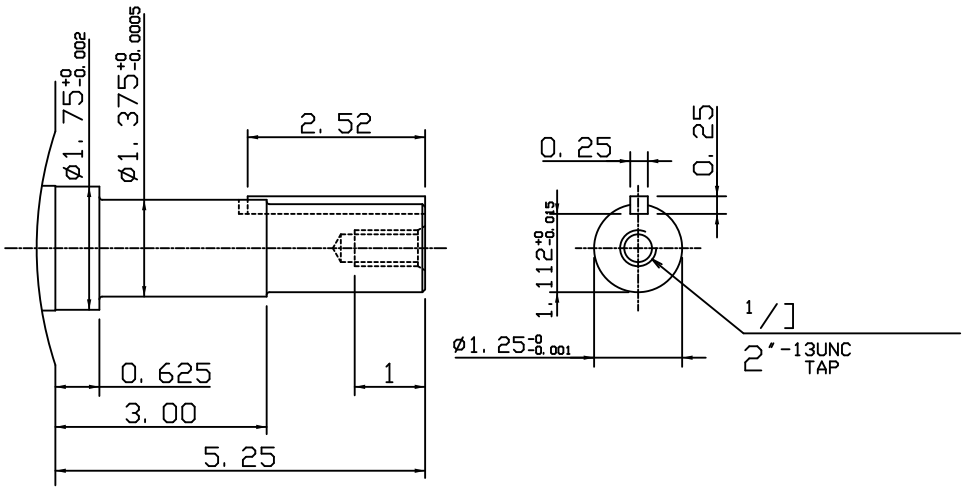

DWN.	K. L. KUO	02-13-08	TECO Westinghouse
CHKD.	K. L. KUO	02-14-08	DWG NO. 31057H211290
APPD.	M. C. TSAI	02-14-08	