DATE Nov. 1, 2016	OUTLINE DIMENSIONS	MOTOR TYPE: AEHH8NJMP
Cat. #: JMP0504	3-PHASE INDUCTION MOTOR	FRAME NO. 326JM

Pole	HP	kW	Hz	VOLT	Syn. Speed r/min(rpm)
4	50	37.3	60	230/460	1800

Ins	Rating	Dimension in	Approx Weight	Bearings	
F	CONT.	inches	660 lbs.	DE: 6312	NDE: 6212

Totally Enclosed Fan-Cooled Type. Squirrel-Cage Rotor.

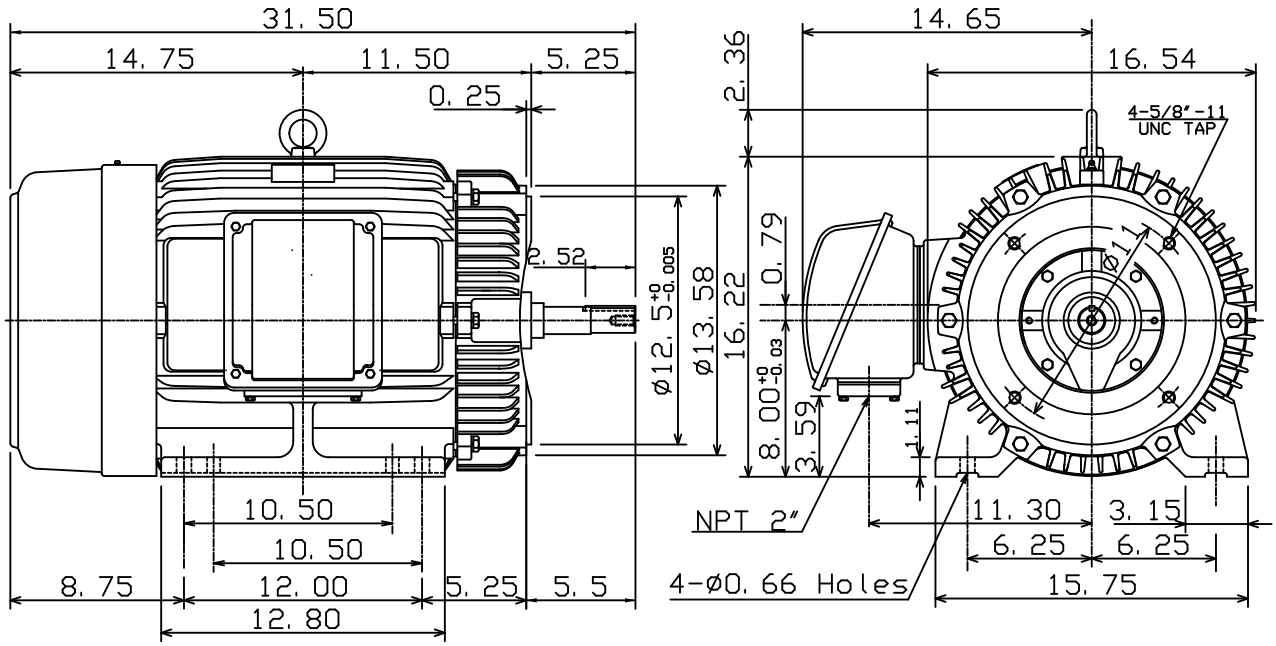

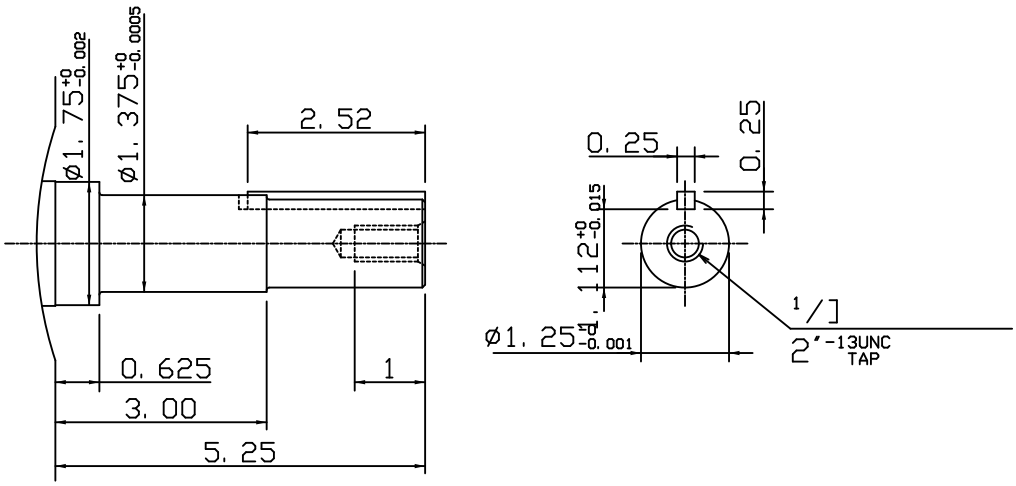

DWN.	K. L. KUO	02-13-08	TECO Westinghouse
CHKD.	K. L. KUO	02-14-08	
APPD.	M. C. TSAI	02-14-08	

DWG NO. 31057H209520