DATE June 30, 2017	OUTLINE DIMENSIONS	MOTOR TYPE: AEHH8NJP
Cat. #: JPP0154	3-PHASE INDUCTION MOTOR	FRAME NO. 254JP

Pole	HP	kW	Hz	VOLT	Syn. Speed r/min(rpm)
4	15	11.2	60	230/460	1800

Ins	Rating	Dimension in	Approx Weight	Bearings
F	CONT.	inch	270 lbs.	DE: 6309ZZ NDE: 6307ZZ

Totally Enclosed Fan Cooled Squirrel Cage Rotor.

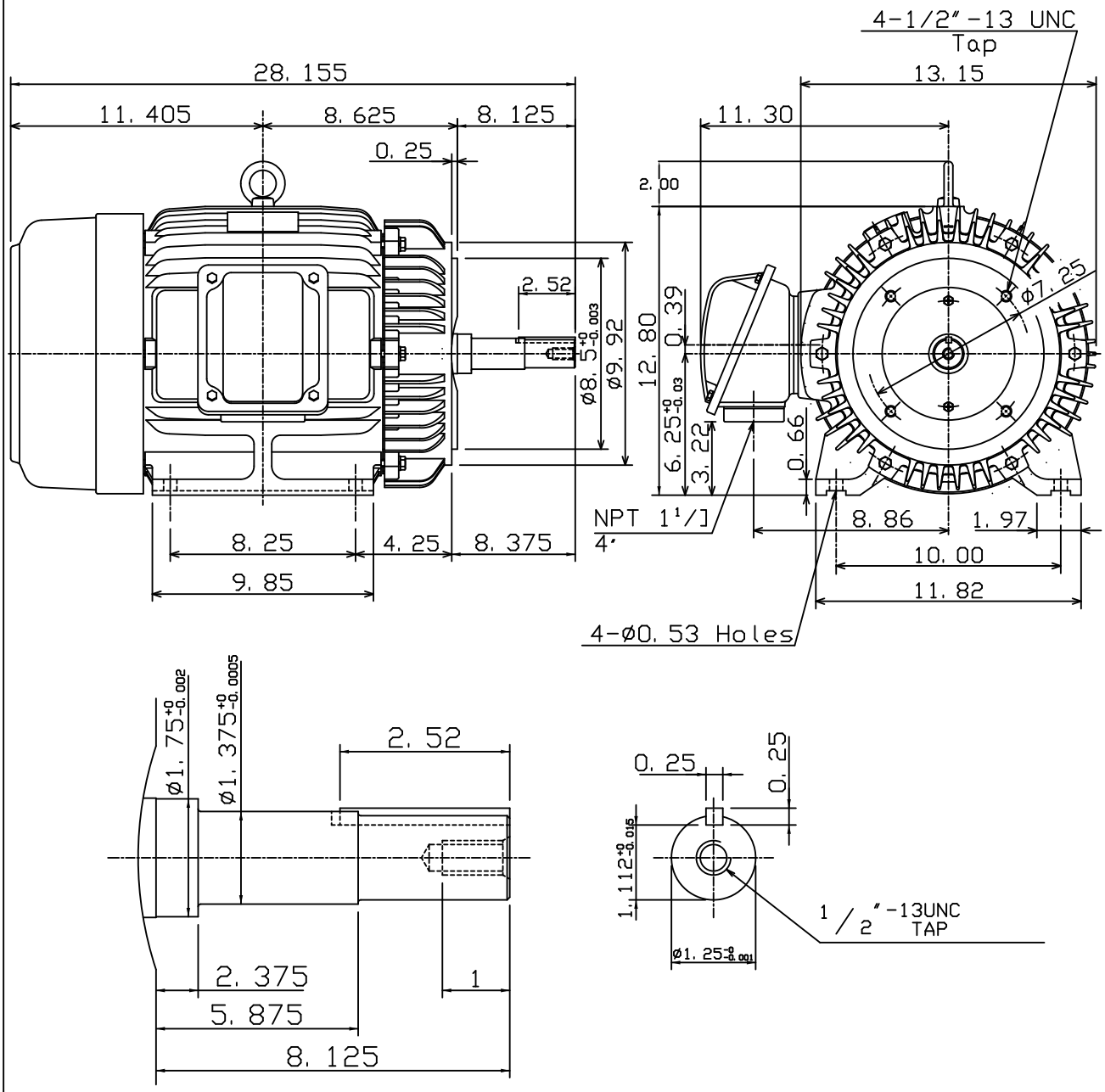

0			

DWN.	K. L. KUO	02·13·08	TECO Westinghouse	DWG NO.
CHKD.	K. L. KUO	02·14·08		31057H255810
APPD.	M. C. TSAI	02·14·08		