DATE Nov. 7, 2008	OUTLINE DIMENSIONS	MOTOR TYPE: AEHH8NJP
Cat. #: JPP0202	3-PHASE INDUCTION MOTOR	FRAME NO. 256JP

Pole	HP	kW	Hz	VOLT	Syn. Speed r/min(rpm)
2	20	14.9	60	230/460	3600

Ins	Rating	Dimension in	Approx Weight	Bearings
F	CONT.	inch	354 lbs.	DE: 6309ZZ NDE: 6307ZZ

Totally Enclosed Fan Cooled Squirrel Cage Rotor.

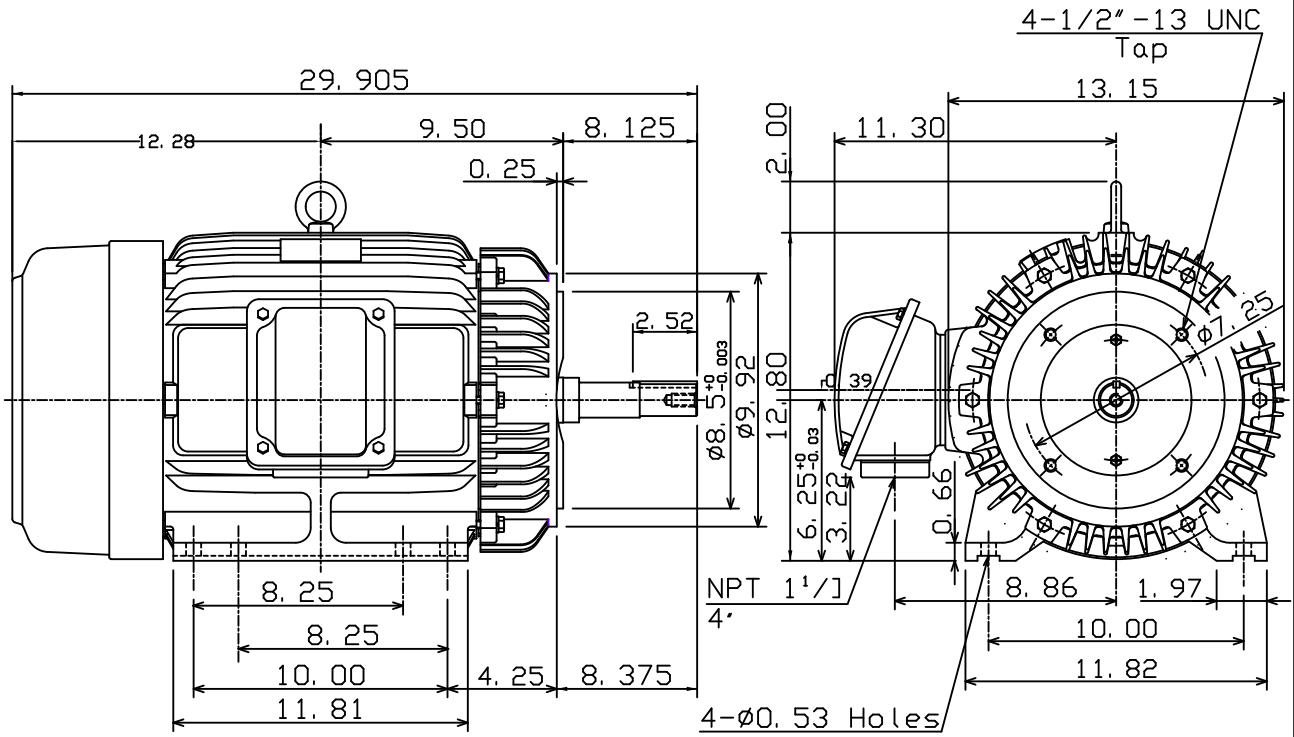

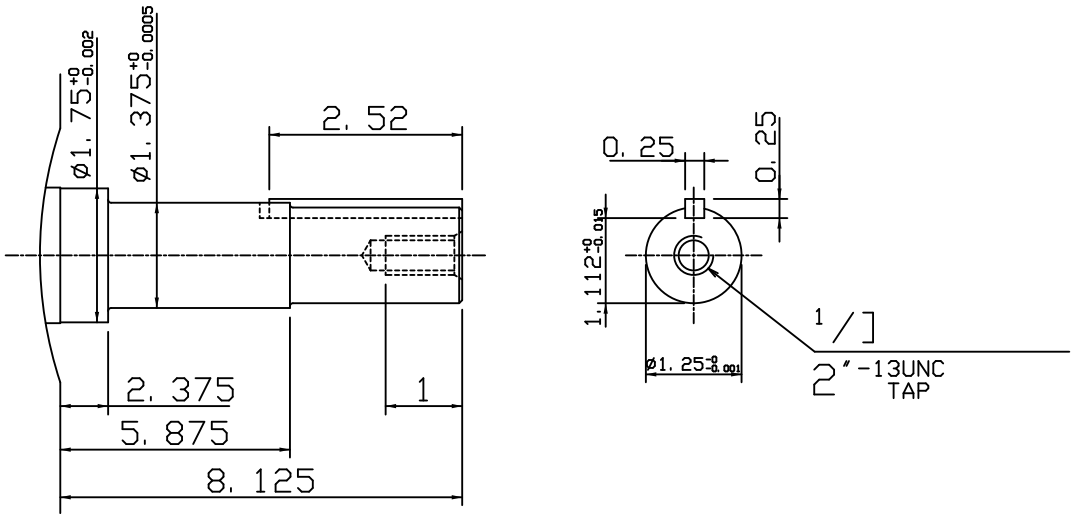

0			

DWN.	K. L. KUO	02-13-08	TECO Westinghouse	DWG NO.
CHKD.	K. L. KUO	02-14-08		31057H203790
APPD.	M. C. TSAI	02-14-08		