DATE Nov. 7, 2018	OUTLINE DIMENSIONS	MOTOR TYPE: AEHH8NJP
Cat. #: JPP0206	3-PHASE INDUCTION MOTOR	FRAME NO. 286JP

Pole	HP	kW	Hz	VOLT	Syn. Speed r/min(rpm)
6	20	15	60	230/460	1200

Ins	Rating	Dimension in	Approx Weight	Bearings
F	CONT.	inches	455 lbs.	DE: 6311ZZ NDE: 6310ZZ

Totally Enclosed Fan-Cooled Type. Squirrel-Cage Rotor.

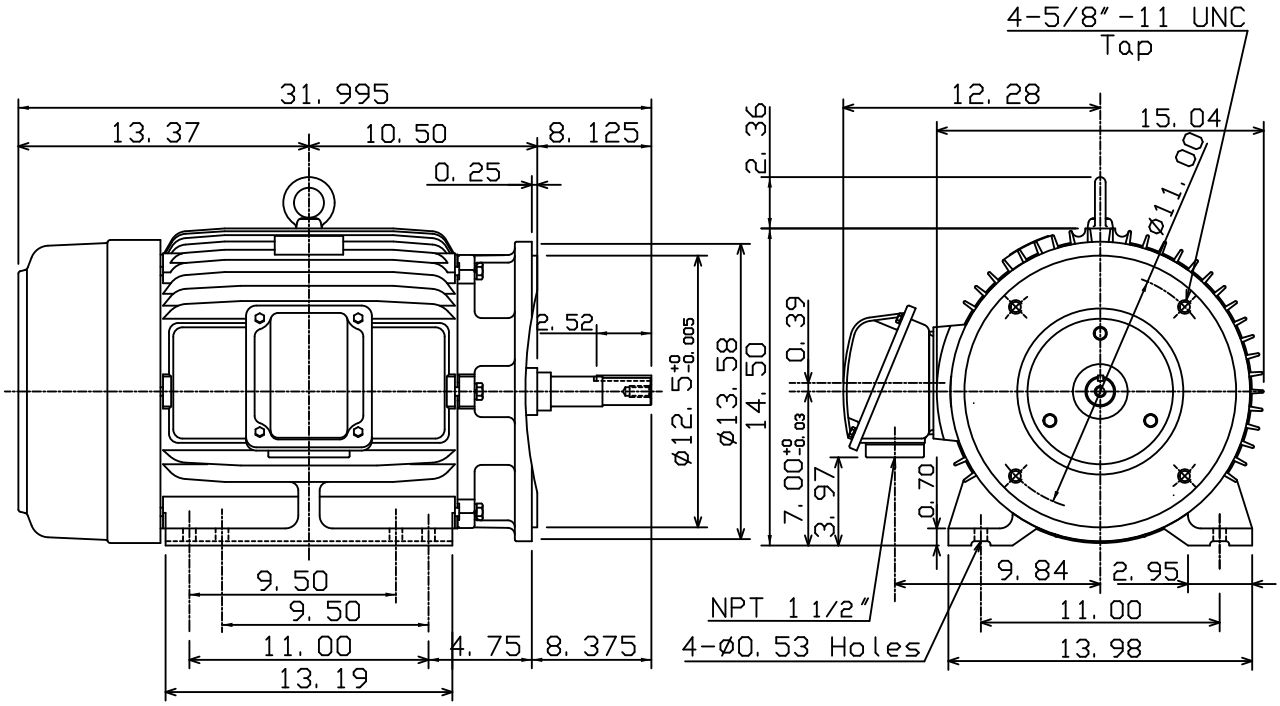

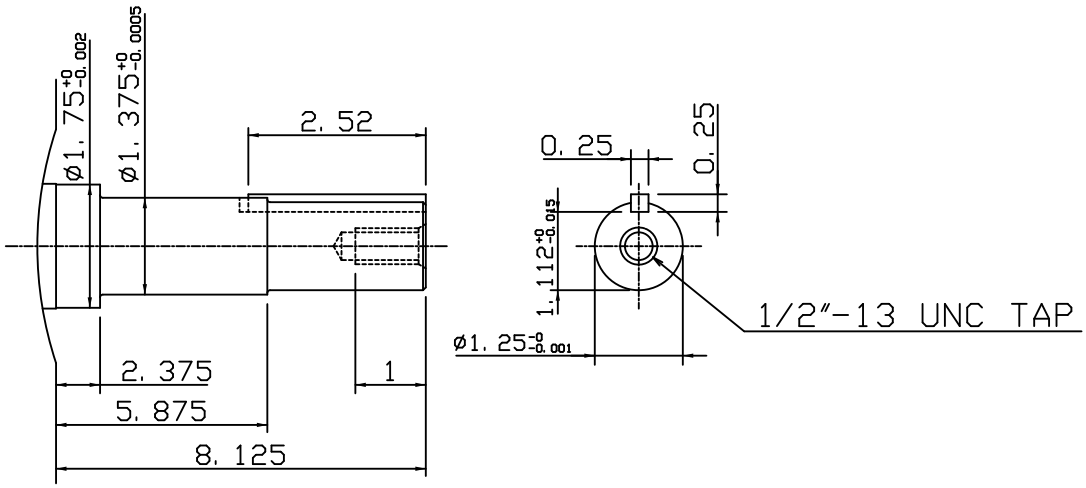

0			

DWN.	K. L. KUO	02-13-08	TECO Westinghouse	DWG NO.
CHKD.	K. L. KUO	02-14-08		31057H212480
APPD.	M. C. TSAI	02-14-08		