DETAIL A
(PROVISION FOR VIBRATION SENSOR)

TYPE	OUTPUT		POLE	TIME RATING	VOLTAGE V	Hz	SYN.SPEED R.P.M
	HP.	kW.					
AEHAGD	250	186.4	6	CONT.	2300/4000	60	1200

TOTALLY ENCLOSED FAN-COOLED TYPE, SQUIRREL-CAGE ROTOR

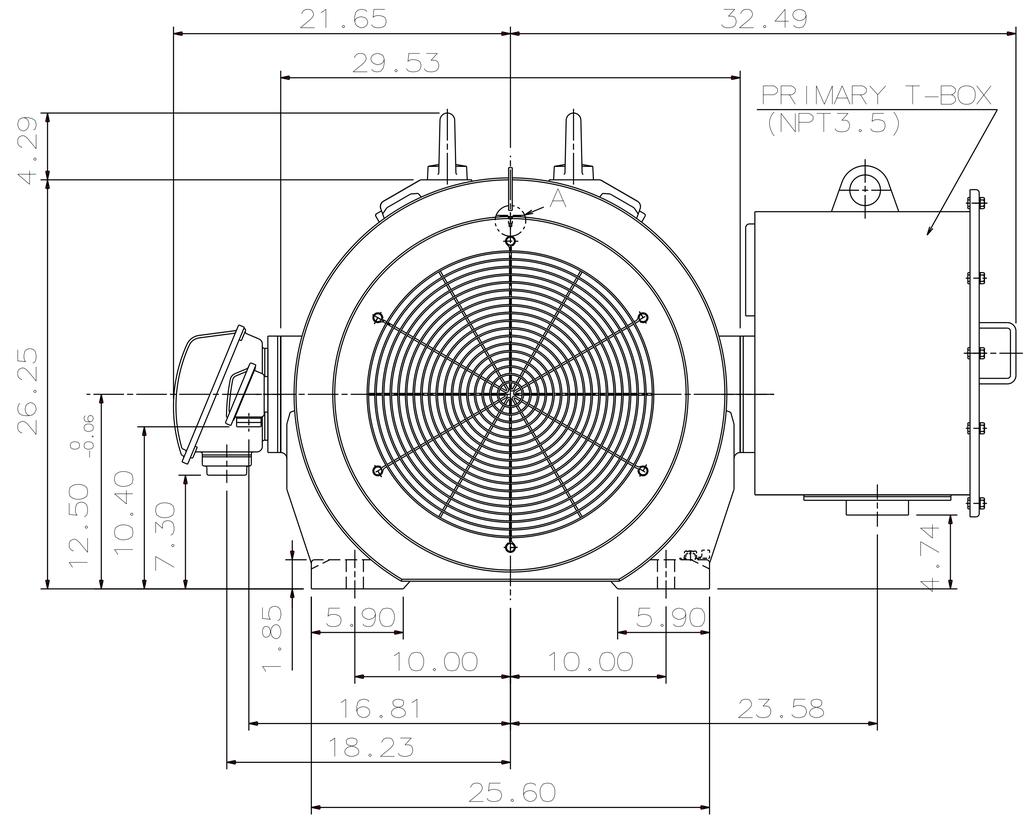

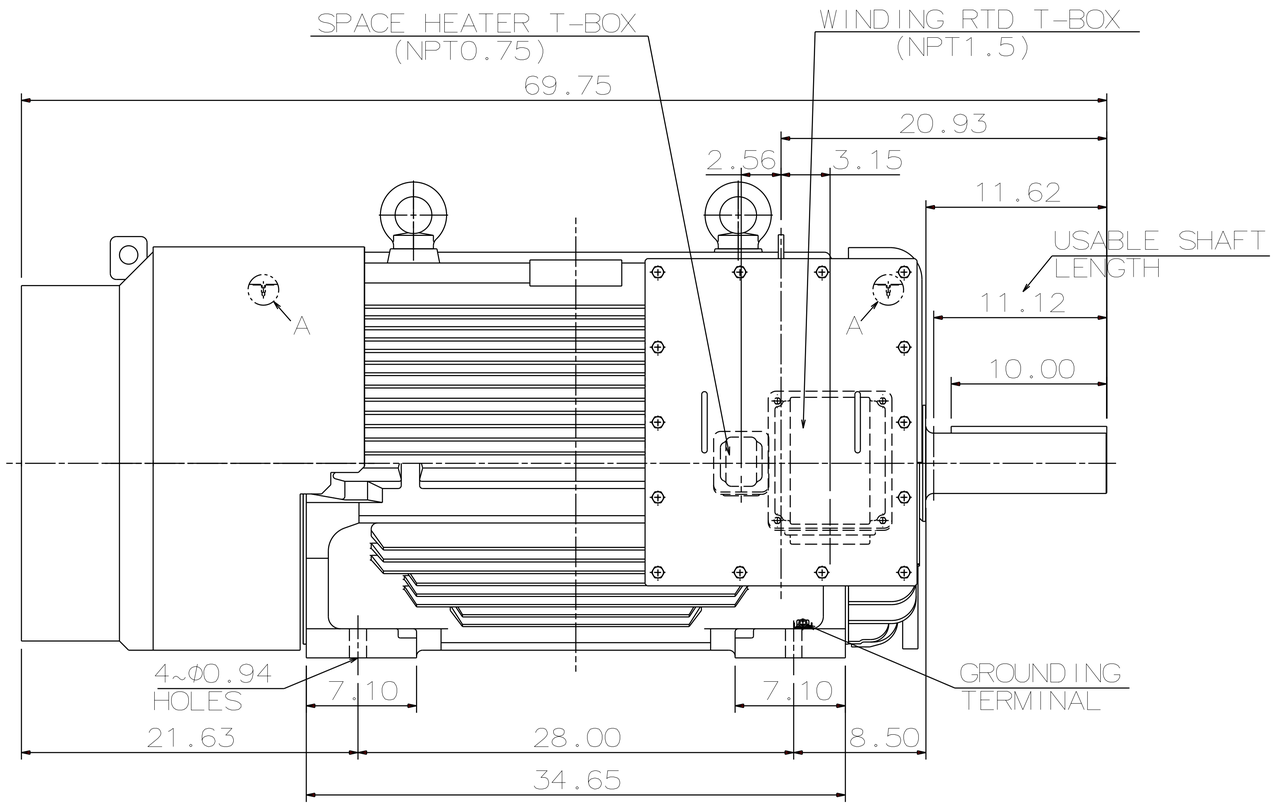

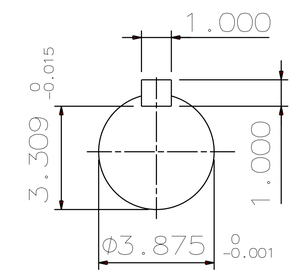

SHAFT END
(ENLARGED VIEW)

NOTE:
1. DIMENSIONS IN inch
2. FRAME NO. 5009C
3. F CLASS INSULATION, S.F.1.15
4. FOR BELT DRIVE
5. ENCLOSURE: IP55
6. BEARING SIZE: DRIVE-END NU324C3
   OPP. DRIVE-END 6320
7. WITH WINDING RTD: PT 100Ω/0℃ 6PCS
8. WITH SPACE HEATER: SINGLE PHASE,120V
9. PROVISION FOR BEARING RTD MOUNTING:
   2~PT1/2" TAPS PER BRACKET
10. NON-SPARKING FAN
11. CORROSION PROOF
12. APPROXIMATE WEIGHT: 4,080 LBS

DWN.	J.CHANG	MAY•26•2015
CHKD.	H.HUANG	MAY•26•2015
APPD.	C.LIU	MAY•26•2015

DATE DEC 08 2016

KD2506R

OUTLINE DIMENSIONS

3-PHASE INDUCTION MOTOR

TECO Westinghouse

DWG NO. 4B040L389 REV:00