CATALOG #	TYPE	FRAME	OUTPUT HP	OUTPUT kW	POLE	SYN. SPEED R.P.M.	VOLTAGE V.	Hz.	TIME RATING	INSULATION CLASS	SERVICE FACTOR	BEARINGS DE	BEARINGS NDE	WEIGHT LBS
KPF2008R	AFHP	5009B	200	149	8	900	2300/4000	60	CONT.	F	1.15	NU324C3	6320C3	3920

TOTALLY ENCLOSED FAN-COOLED TYPE. SQUIRREL-CAGE ROTOR

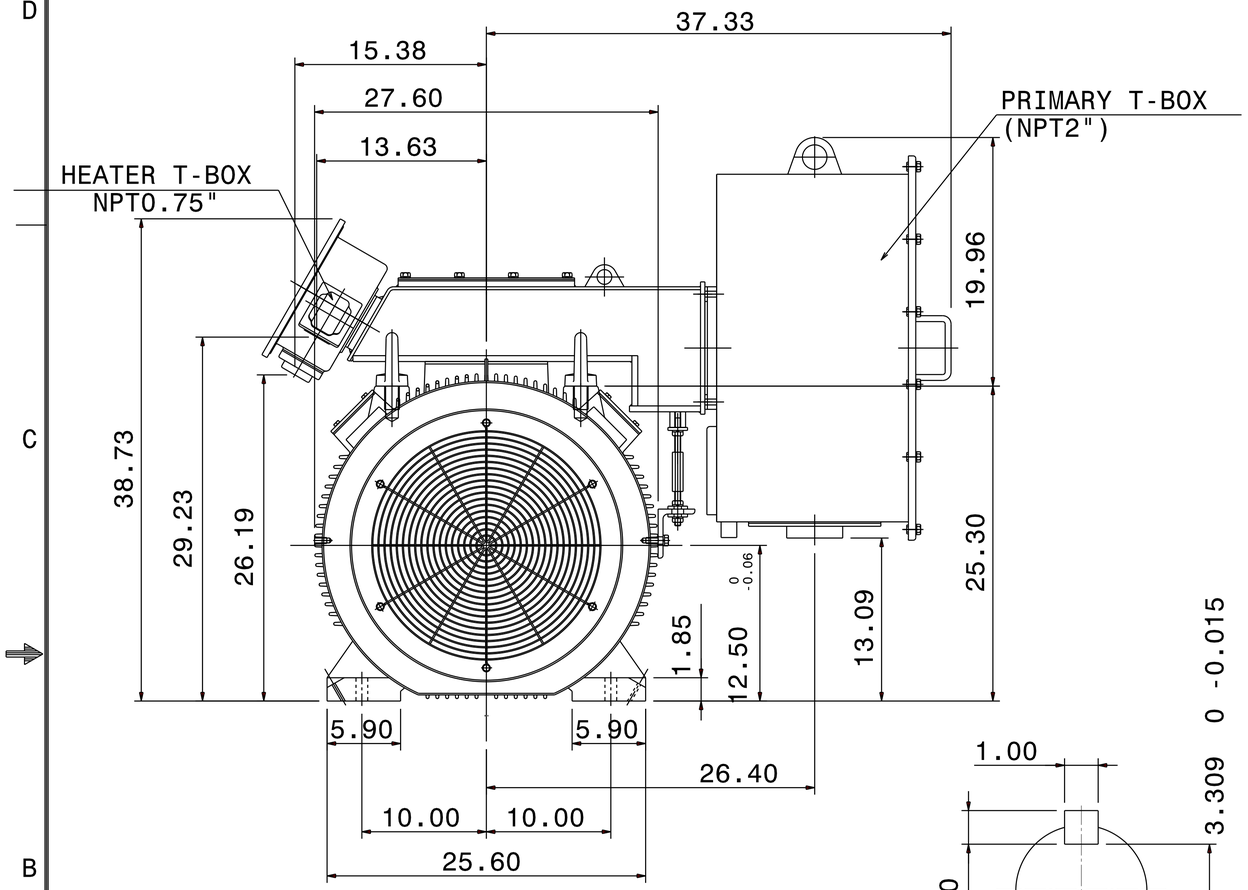

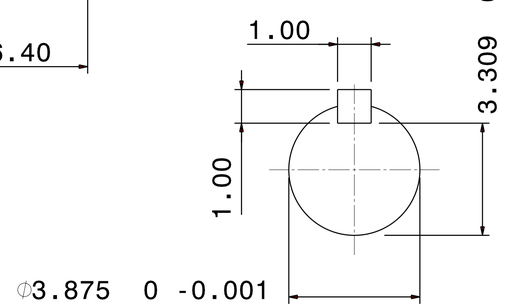

SHAFT END
(ENLARGED VIEW)

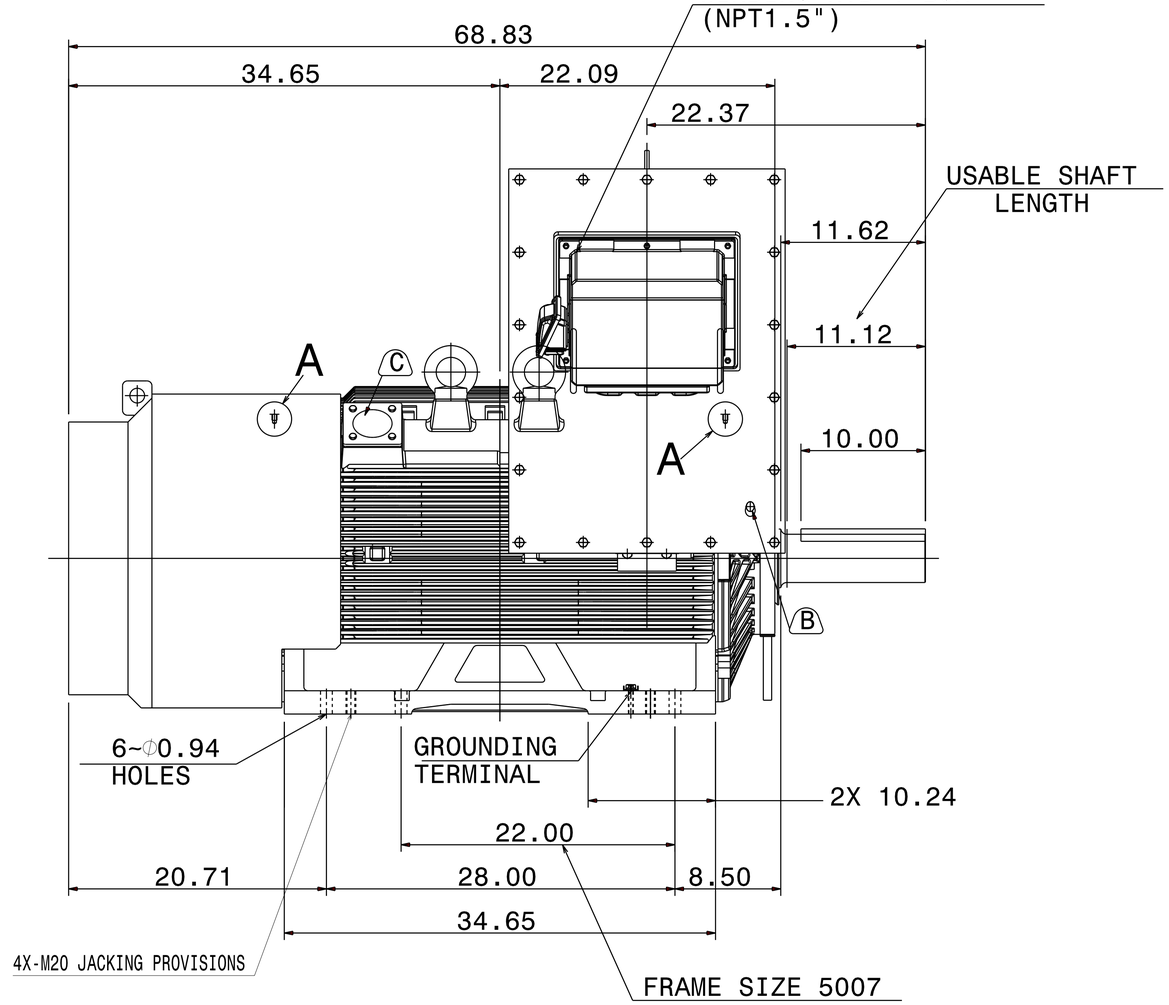

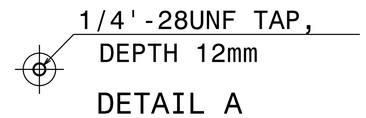

DETAIL A
PROVISION FOR VIBRATION DETECTORS

NOTE:
1. DIMENSIONS IN inch
2. ENCLOSURE: IP55
3. F CLASS INSULATION
4. FOR DIRECT FLEXIBLE COUPLING
5. WITH SAPCE HEATER & WINDING RTD

(B) FOR BEARING RTD, END BRACKETS SHALL BE PRE-DRILLED AND PLUGGED.

(C) FOR AUXILIARY, FRAME SHALL BE PRE-DRILLED AND COVERD WITH STEEL PLATE.

DWN.	L.JHENG	APR ·29 2019
CHKD.	H.WANG	APR ·30 2019
APPD.	C.WANG	APR ·30 2019

DATE

KPF2008R

OUTLINE DIMENSIONS

3-PHASE INDUCTION MOTOR

TECO Westinghouse

DWG NO. 5A040C209

REV: 01

1/1