TYPE	OUTPUT		POLE	TIME RATING	VOLTAGE V	Hz	SYN. SPEED R. P. M
	HP.	kW.					
AESV3W	125	93. 3	6	CONT.	230/460	60	1200

TOTALLY ENCLOSED FAN-COOLED TYPE. SQUIRREL-CAGE ROTOR

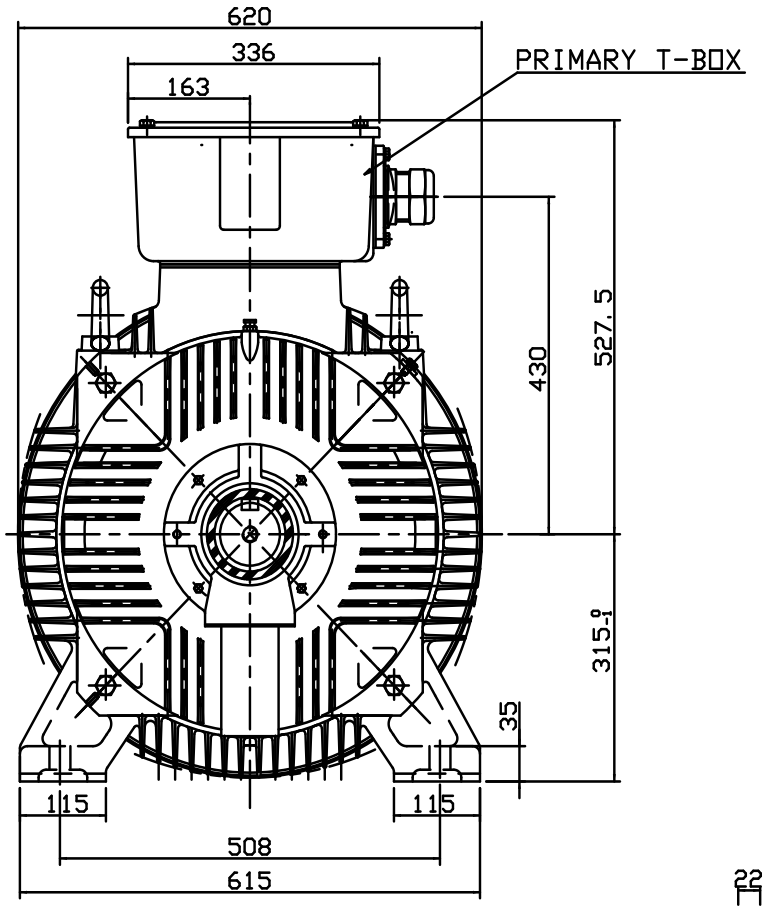

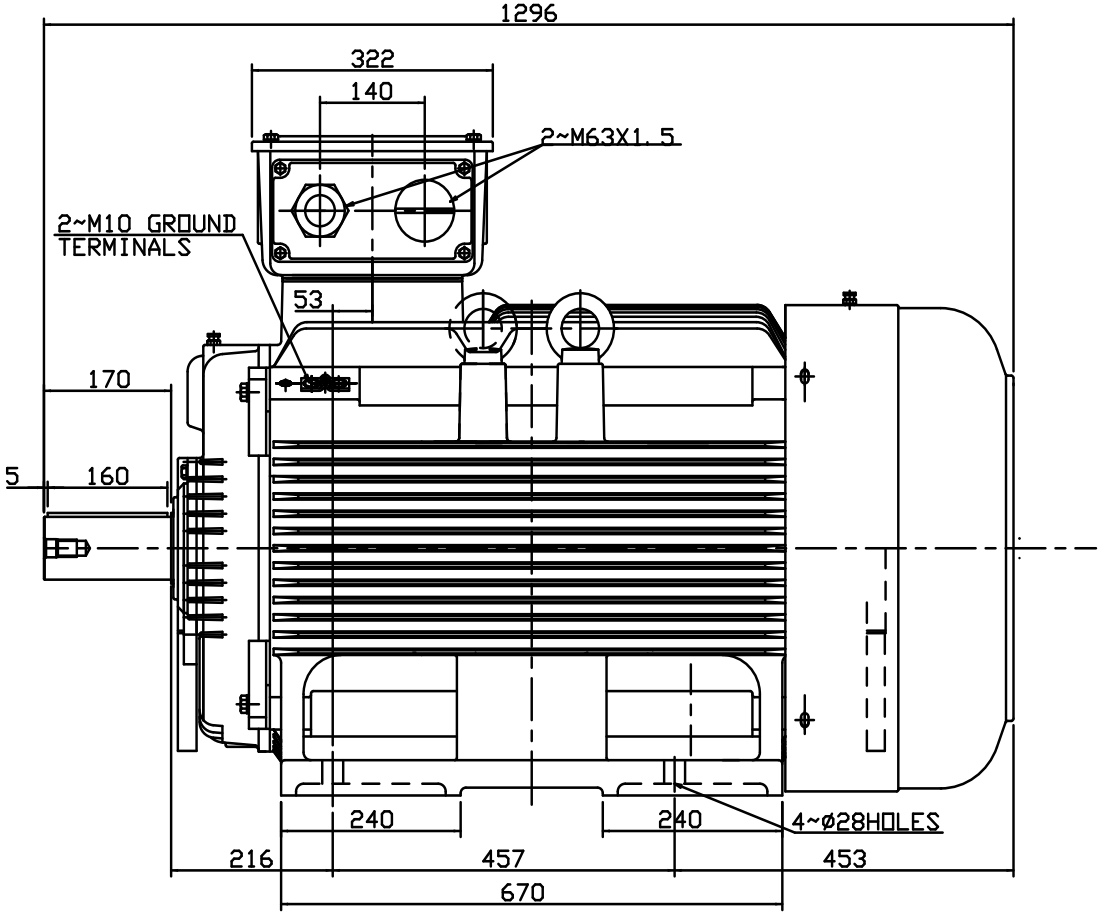

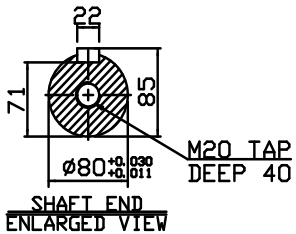

NOTE:
1. DIMENSIONS IN MM
2. FRAME NO. 315MB
3. F CLASS INSULATION
4. FOR DIRECT FLEXIBLE COUPLING
5. APPROX. WEIGHT: 1160 KG.

DWN.	W. CAO	OCT 15 2015
CHKD.	G. YUAN	OCT 15 2015
APPD.	S. XU	OCT 15 2015

DATE 1/11/16

CATALOG# MP1256

TECO Westinghouse

OUTLINE DIMENSIONS
3-PHASE INDUCTION MOTOR

DWG NO. 3W049Z574

REV: 00