DATE JAN. 15, 2015	OUTLINE DIMENSIONS 3-PHASE INDUCTION MOTOR	MOTOR TYPE: AEHH8P-SGR
CAT. #: NP0034G		FRAME NO. 182T

Pole	HP	kW	Hz	VOLT	Syn.Speed r/min(rpm)
4	3	2.24	60	230/460	1800

Ins	Rating	Dimension in	Approx Weight	Bearings
F	CONT.	inch	81 lbs.	DE: 6306ZZ NDE: 6306ZZ

Totally Enclosed Fan Cooled Squirrel Cage Rotor.

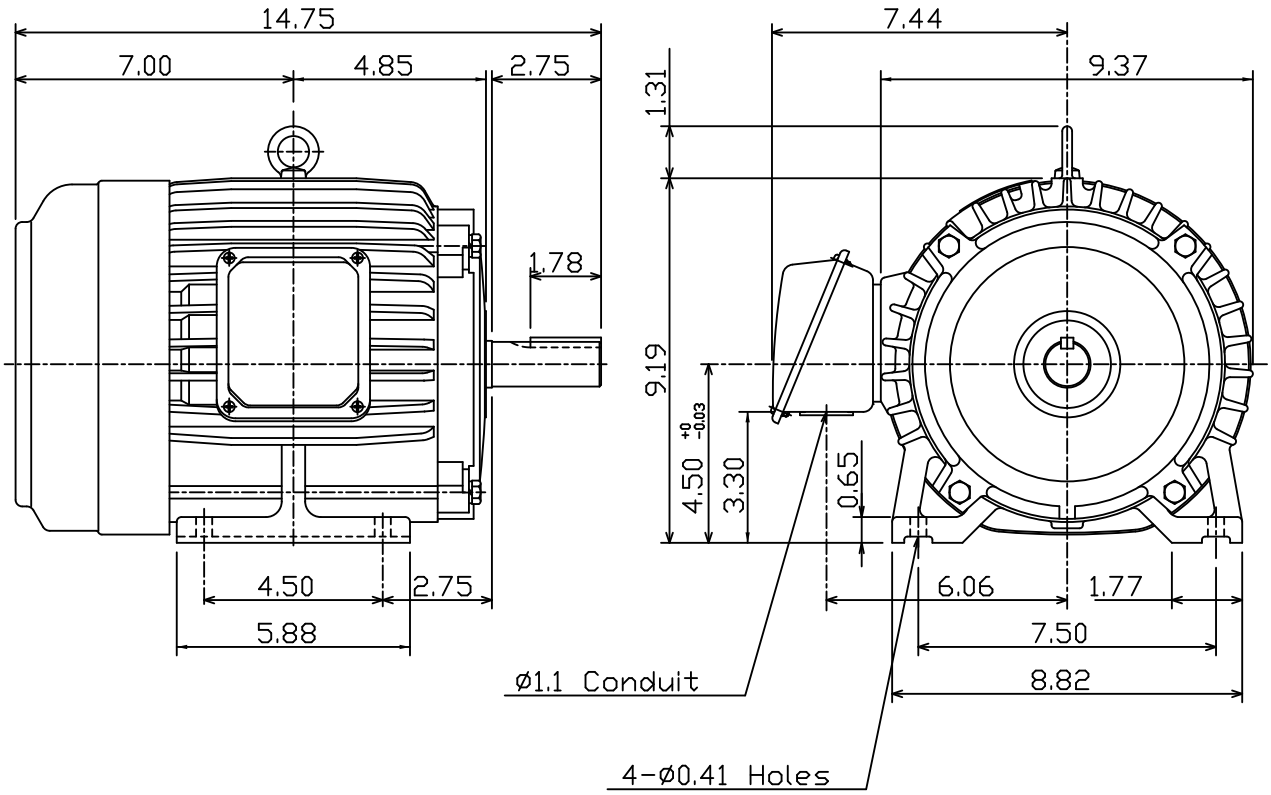

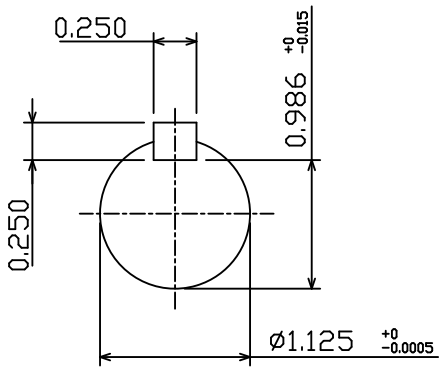

NOTE:
1. Shaft Grounding Ring installed—NDE

0				

DWN.	J.H.LIANG	05·20·99	TECO Westinghouse	DWG NO.
CHKD.	C.S.LO	05·26·99		31049D189290
APPD.	Y.B.HUANG	05·26·99		