| DATE JUNE. 8, 2020 | OUTLINE DIMENSIONS | MOTOR TYPE: AEHH8P |
|---|---|---|
| CAT.#: NP0306 | 3-PHASE INDUCTION MOTOR | FRAME NO. 326T(X) |

| Pole | HP | kW | Hz | VOLT | r/min(rpm) |
|---|---|---|---|---|---|
| 6 | 30 | 22 | 60 | 230/460 | 1200 |

| Ins | Rating | Dimension in | Approx Weight | Bearings |
|---|---|---|---|---|
| F | CONT. | inch | 545 lbs | DE: 6312 NDE: 6310 |

Totally Enclosed Fan-Cooled Type. Squirrel-cage Rotor.

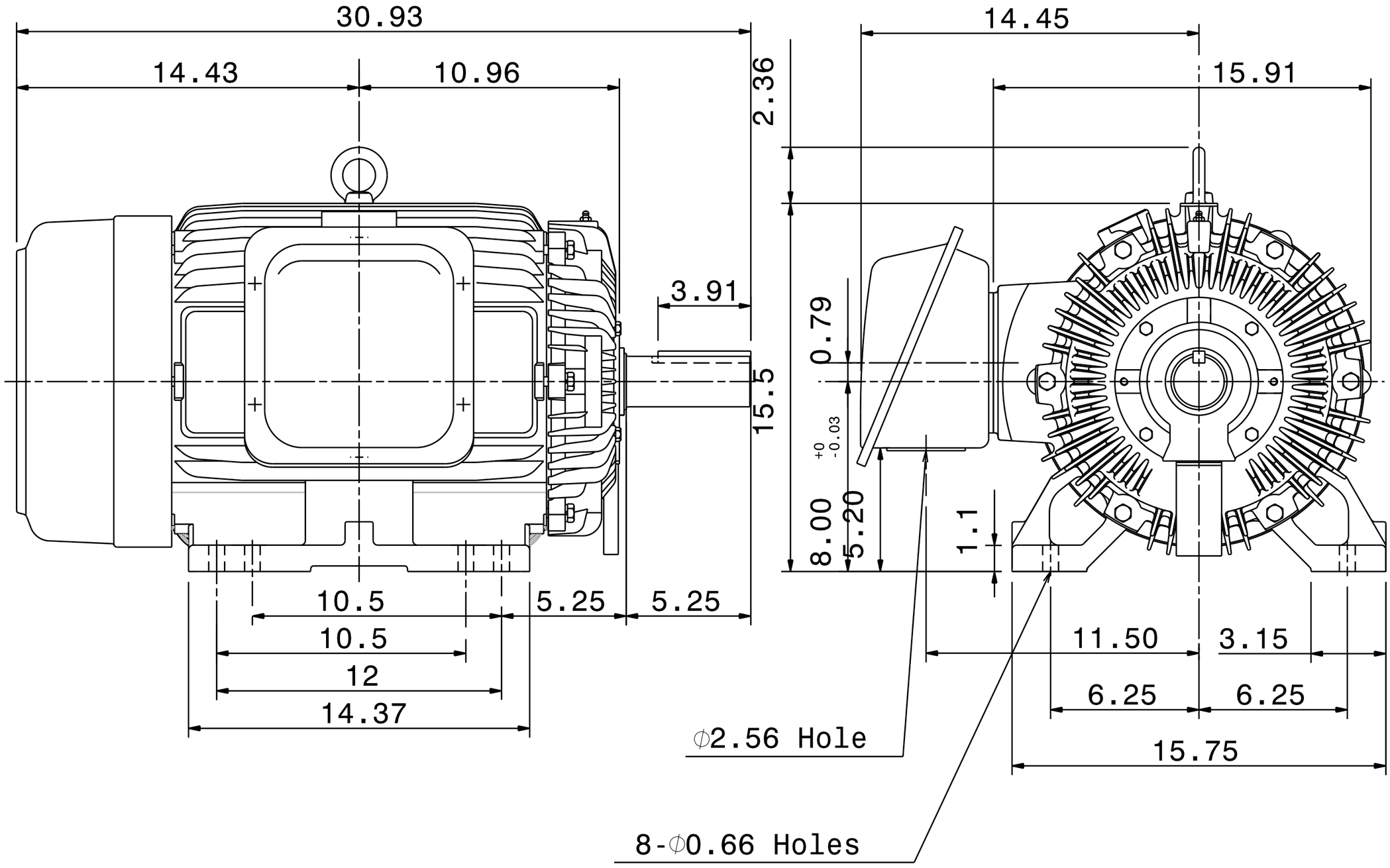


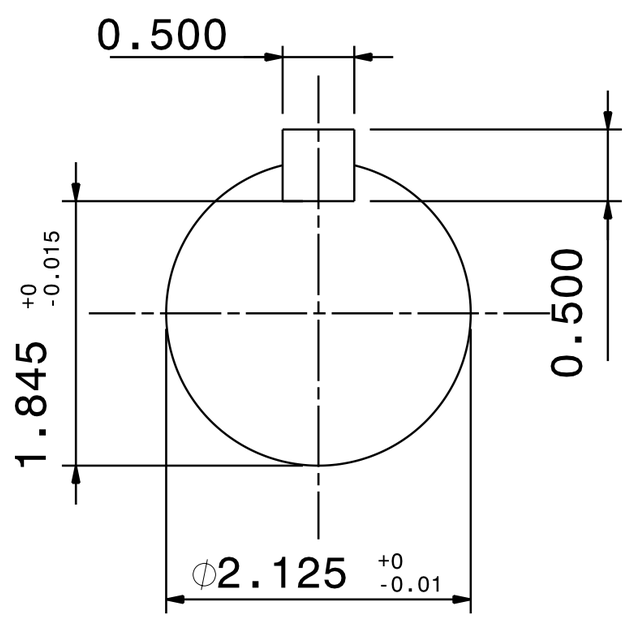


| | | |
|---|---|---|
| 1 | 01.17.20 | Enlarge T-BOX volume. Z.L.LEE |

| | | | | |
|---|---|---|---|---|
| DWG. | J.F.CHEN | 07·11·19 | TECO Westinghouse | DWG NO. 31057M097061 |
| CHKD. | M.C.JENG | 07·16·19 | | |
| APPD. | M.C.JENG | 07·16·19 | | |