DATE APRIL 25, 2011	OUTLINE DIMENSIONS	MOTOR TYPE: AEHH8P-CF
CAT. #: NP0502C	3-PHASE INDUCTION MOTOR	FRAME NO. 326TSC

Pole	HP	kW	Hz	VOLT	Syn.Speed r/min(rpm)
2	50	37.3	50	190/380	3000

Ins	Rating	Dimension in	Approx Weight	Bearings
F	CONT.	inch	662 lbs.	DE: 6312C3 NDE: 6212C3

Totally Enclosed Fan-Cooled Type. Squirrel-cage Rotor.

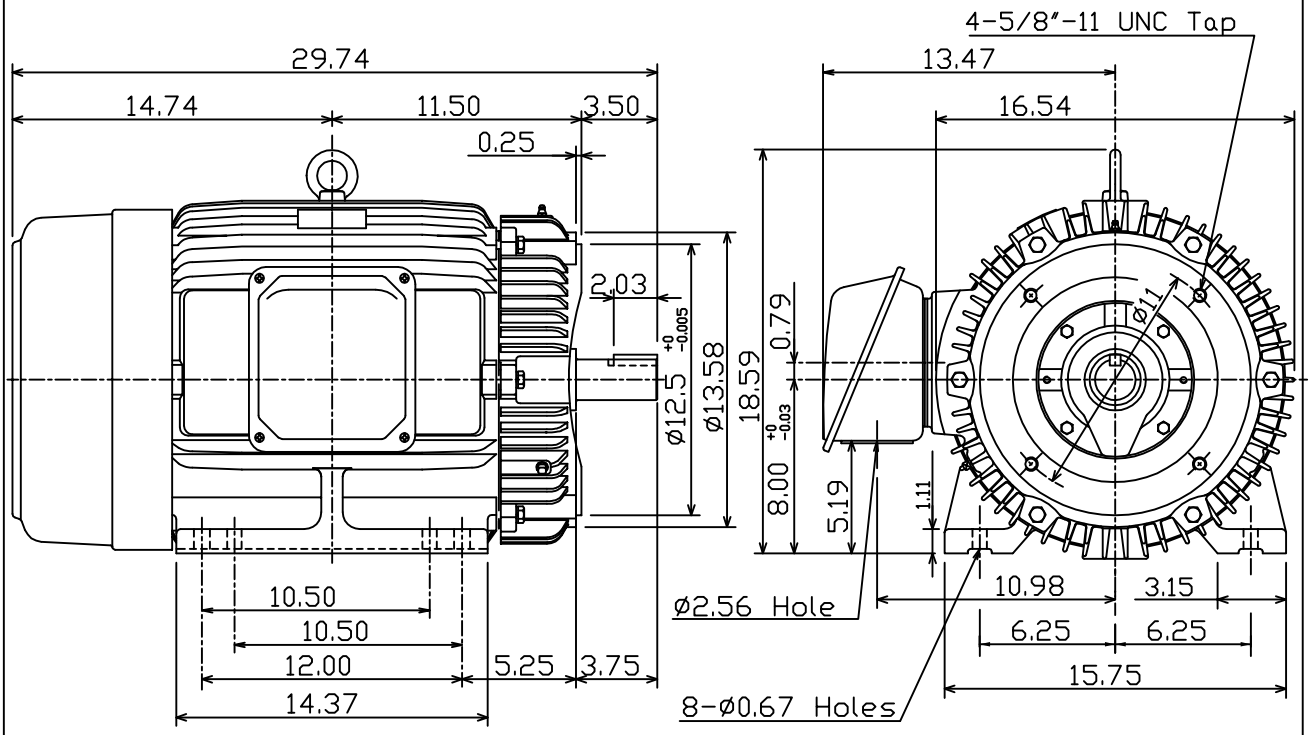

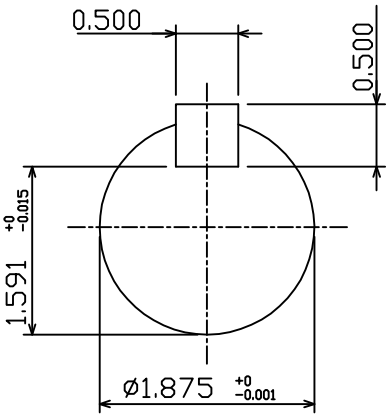

0				

DWN.	K.L.KUO	04-21-11	TECO Westinghouse	DWG NO.
CHKD.	K.L.KUO	04-21-11		31049J356200
APPD.	M.C.TSAI	04-21-11		