DATE DEC. 16, 2010	OUTLINE DIMENSIONS	MOTOR TYPE: AEHH8P
CAT. #: NP0756	3-PHASE INDUCTION MOTOR	FRAME NO. 405T

Pole	HP	kW	Hz	VOLT	Syn.Speed r/min(rpm)
6	75	56	50	190/380	1000

Ins	Rating	Dimension in	Approx Weight	Bearings	
F	CONT.	inches	1190 lbs.	DE: 6317	NDE: 6313

Totally Enclosed Fan-Cooled Type.Squirrel-cage Rotor.

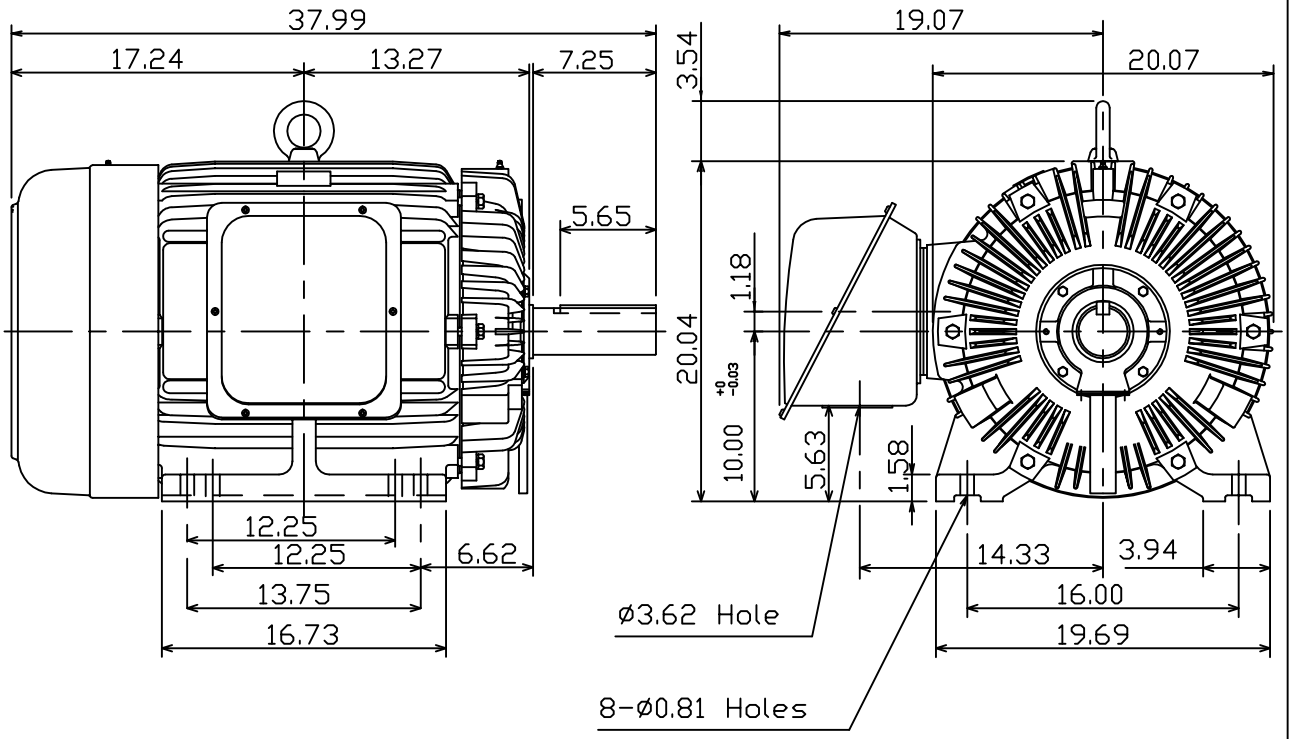

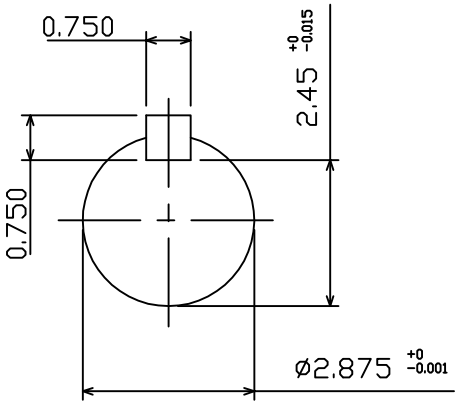

0				

DWN.	K.L.KUO	12 06 10	TECO Westinghouse	DWG NO.
CHKD.	K.L.KUO	12 07 10		31049M241710
APPD.	M.C.TSAI	12 07 10		