TYPE	OUTPUT		POLE	TIME RATING	VOLTAGE V	Hz	SYN.SPEED R.P.M
	HP.	kW.					
AEHH8P	125	93.3	4	CONT.	230/460	60	1800

TOTALLY ENCLOSED FAN-COOLED TYPE. SQUIRREL-CAGE ROTOR

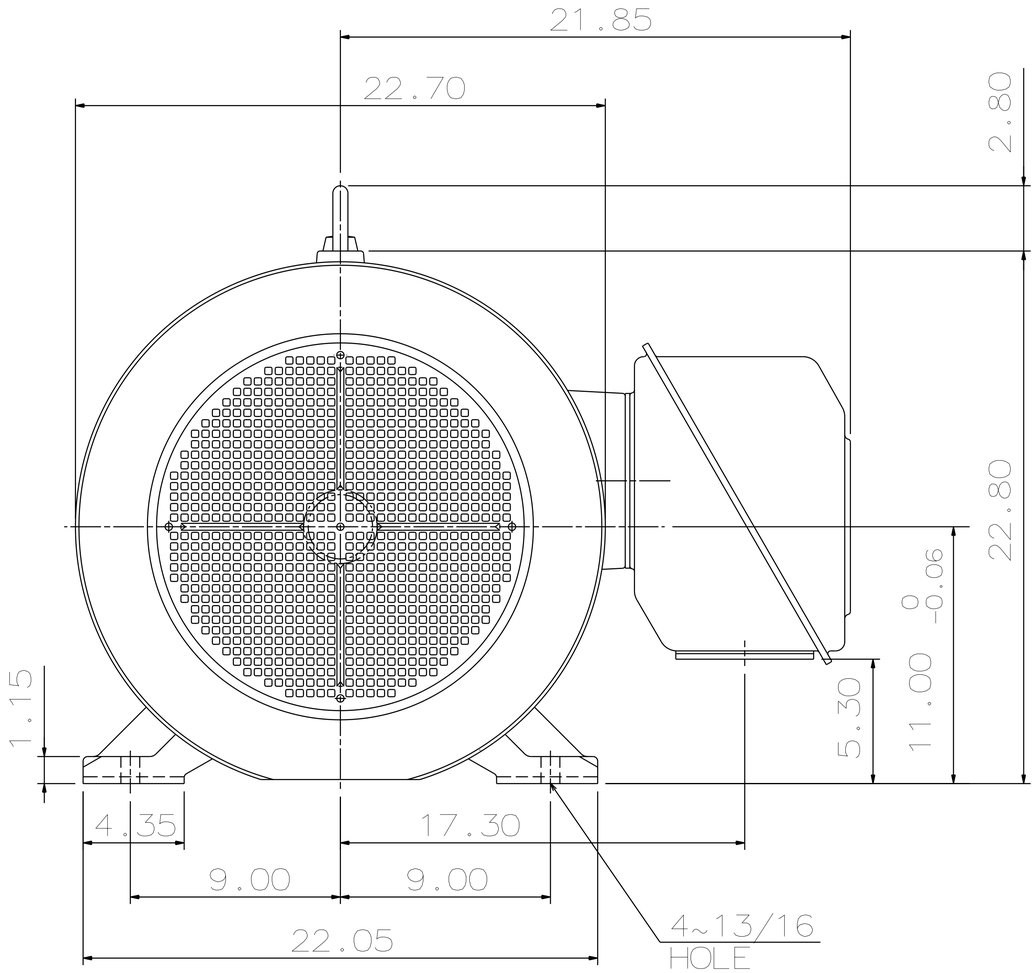

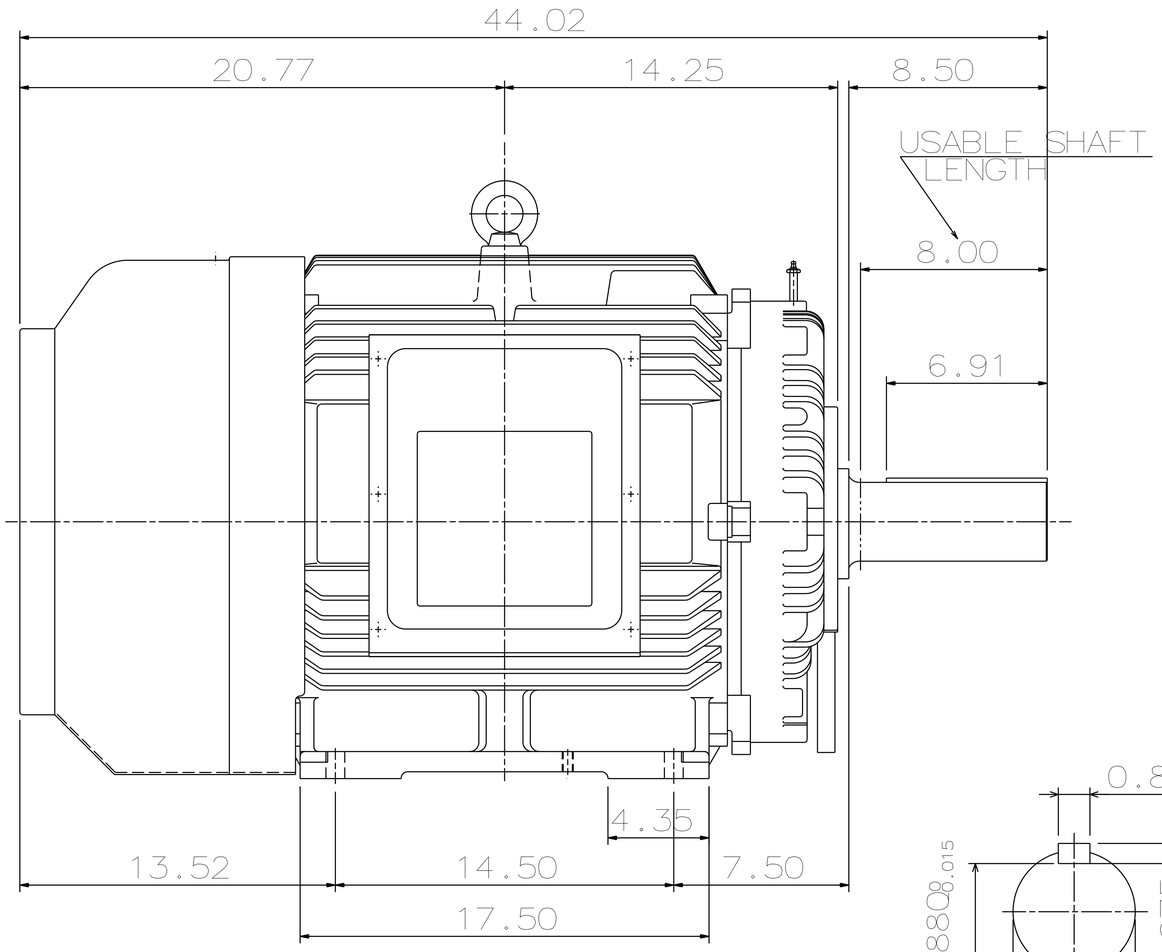

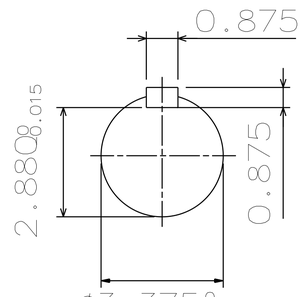

SHAFT END
[ENLARGED VIEW]

NOTE:

1. DIMENSIONS IN INCHES
2. FRAME SIZE 444T
3. F CLASS INSULATION, S.F. 1.15
4. FOR DIRECT FLEXIBLE COUPLING
5. BEARING NO.: DRIVE END: 6318C3
   OPP. DRIVE END: 6316C3
6. ENCLOSURE: IP44
7. APPROX. WEIGHT: 1500 LBS
8. SHAFT GROUNDING RING INSTALLED.

DWN.	S.LEE	JAN•26•2011
CHKD.	S.LEE	JAN•26•2011
APPD.	H.LIU	JAN•26•2011

DATE FEB. 11, 2011

CATALOG #: NP1254

OUTLINE DIMENSIONS

3-PHASE INDUCTION MOTOR

TECO Westinghouse

DWG NO. 3A049DWB10464-25

REV: 00