TYPE	OUTPUT		POLE	TIME RATING	VOLTAGE V	Hz	SYN.SPEED R.P.M
	HP.	kW.					
AEHH8P	125	93.3	6	CONT.	190/380	50	1000

TOTALLY ENCLOSED FAN-COOLED TYPE. SQUIRREL-CAGE ROTOR

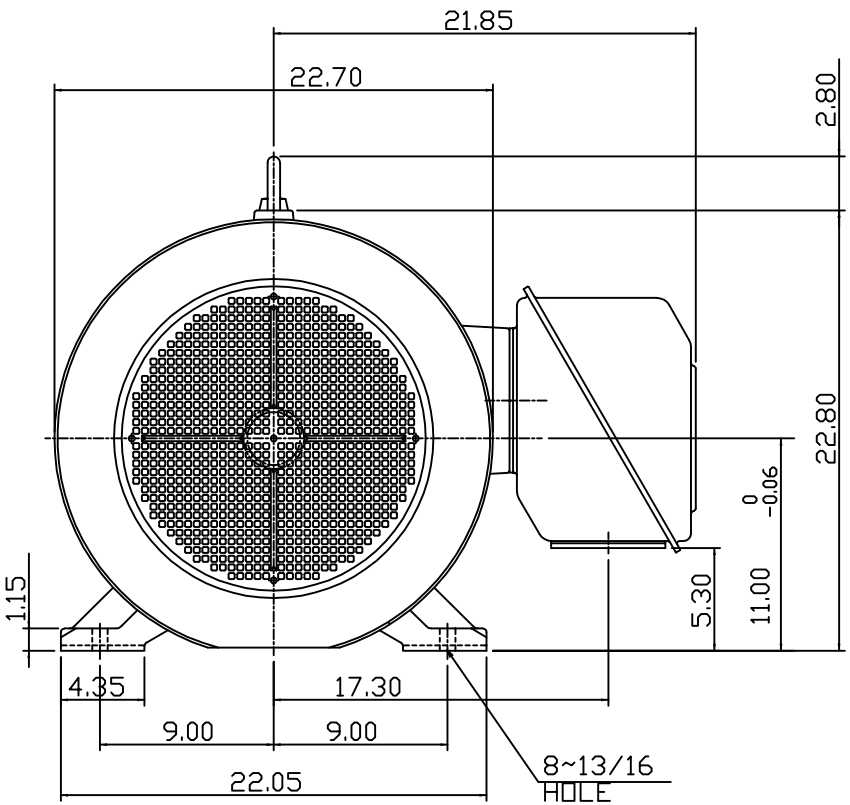

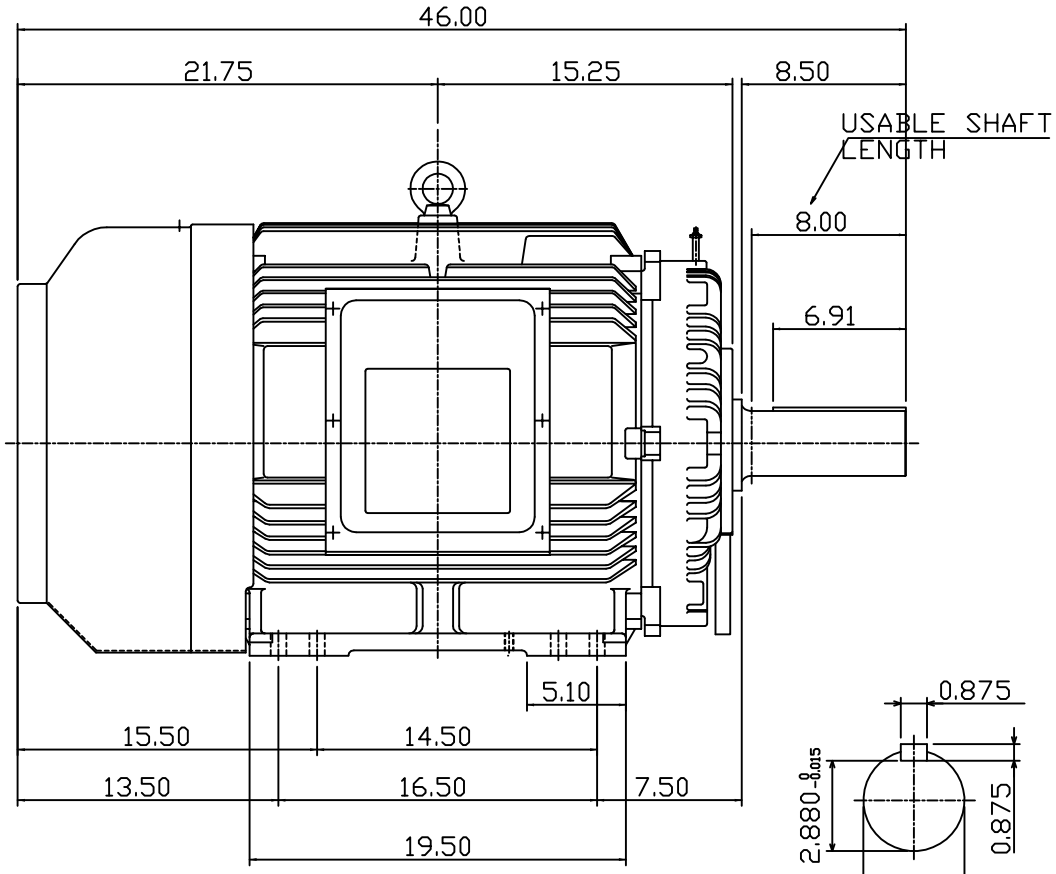

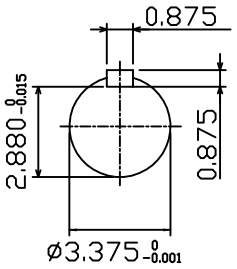

SHAFT END
[ENLARGED VIEW]

NOTE:
1. DIMENSIONS IN INCHES
2. FRAME SIZE 445T
3. F CLASS INSULATION, S.F. 1.0
4. FOR DIRECT FLEXIBLE COUPLING
5. BEARING NO.: DRIVE END: 6318C3
   OPP. DRIVE END: 6316C3
6. ENCLOSURE: IP44
7. APPROX. WEIGHT: 1800 LBS

DWN.	S.LEE	JAN·26·2011
CHKD.	S.LEE	JAN·26·2011
APPD.	H.LIU	JAN·26·2011

DATE FEB. 11, 2011
CATALOG #: NP1256

OUTLINE DIMENSIONS
3-PHASE INDUCTION MOTOR

TECO Westinghouse

DWG NO. 3A049DWB10464-26
REV: 00