POLE	HP	kW	Hz	VOLT	r/min(RPM)	INS	RATING	DIMENSION IN	APPROX WEIGHT	BEARINGS
2	150	111	60	460	3600	F	CONT.	INCHES	1481lbs	DE: 6314C3 NDE: 6314C3

TOTALLY ENCLOSED FAN-COOLED TYPE. SQUIRREL-CAGE ROTOR

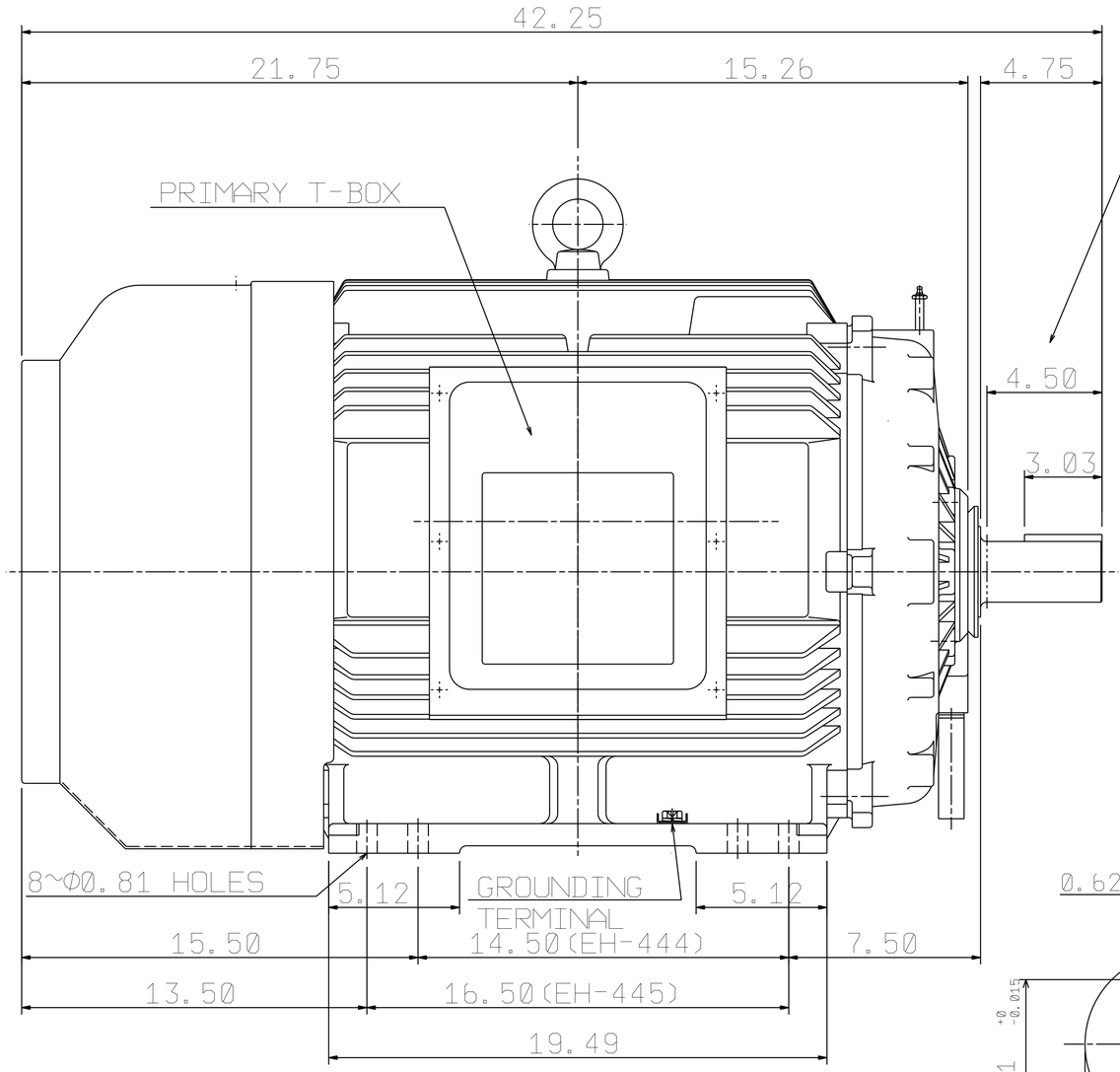

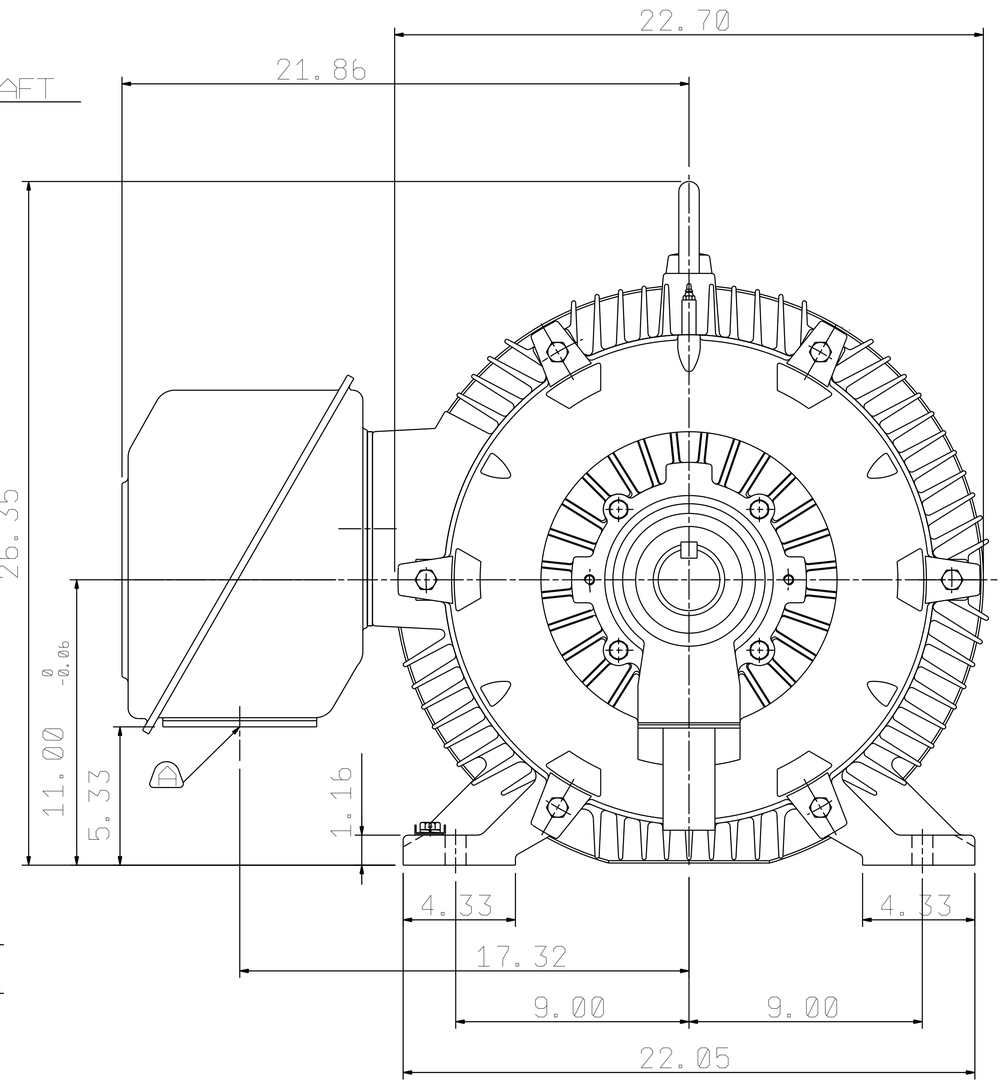

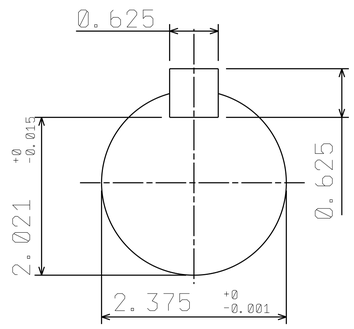

SHAFT END
ENLARGED VIEW

NOTE:
1. FOR DIRECT FLEXIBLE COUPLING
2. ENCLOSURE: IP54 PROTECTION

REMOVABLE COVER FOR CABLE ENTRY TO BE DRILLED BY THE CUSTOMER.

OUTLINE DIMENSIONS
3-PHASE INDUCTION MOTOR

MOTOR TYPE	AEHH8P	FRAME NO.	445TS
CATALOG #	NP1502	DATE	MARCH. 5, 2020
ORDER NO.	.	TRANS. SHEET	.

APPD.	BEN. YANG	04·08·19
CHKD.	K.L.KUO	04·08·19
DWG.	K.L.KUO	02·12·19

TECO Westinghouse

DWG NO. 31057C524081

1	06.13.19	Show approx weight	K.L.KUO