POLE	HP	kW	Hz	VOLT	r/min(RPM)	INS	RATING	DIMENSION IN	APPROX WEIGHT	BEARINGS
4	150	111	60	460	1800	F	CONT.	INCHES	1510lbs	DE: 6318 NDE: 6316

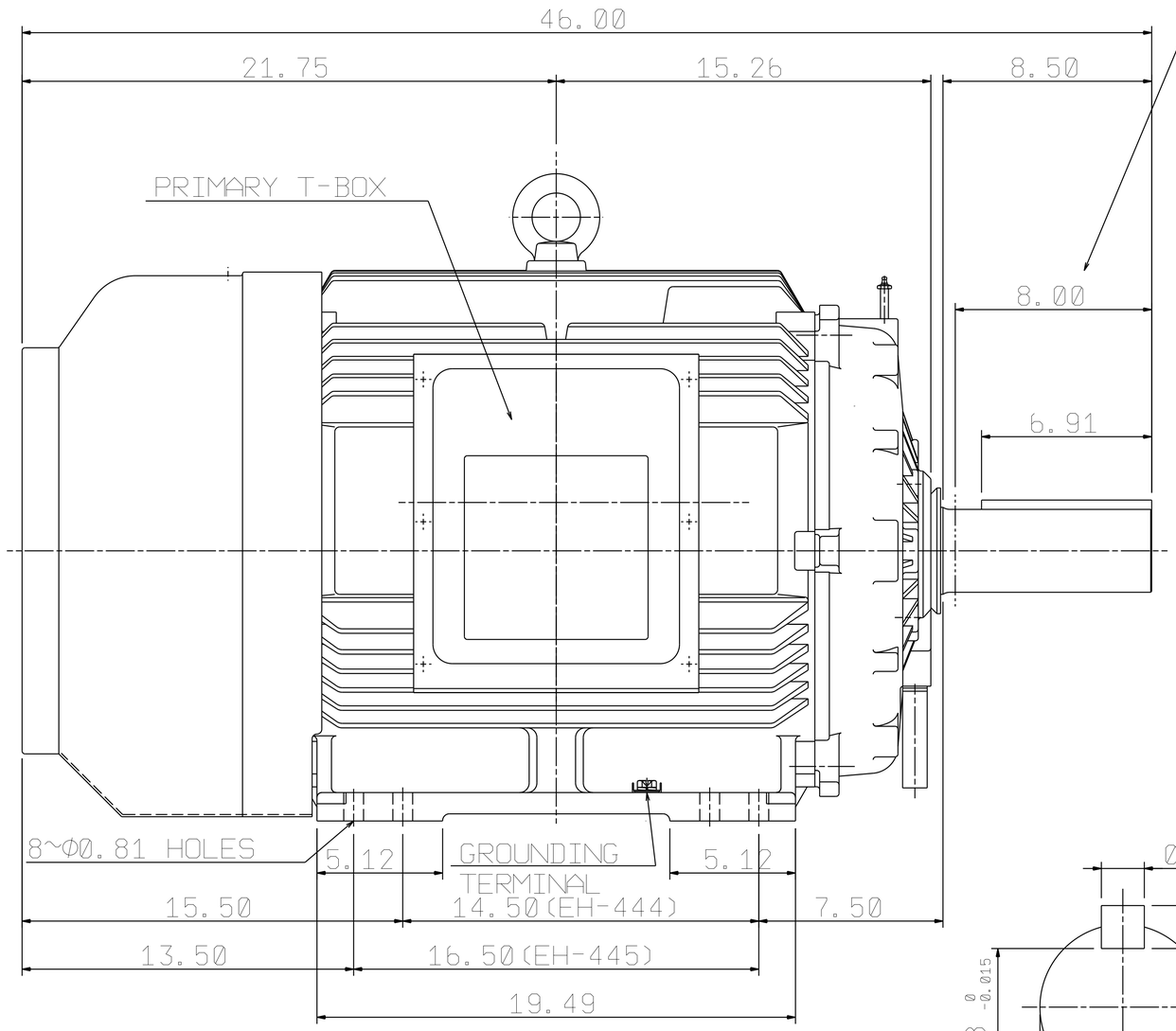

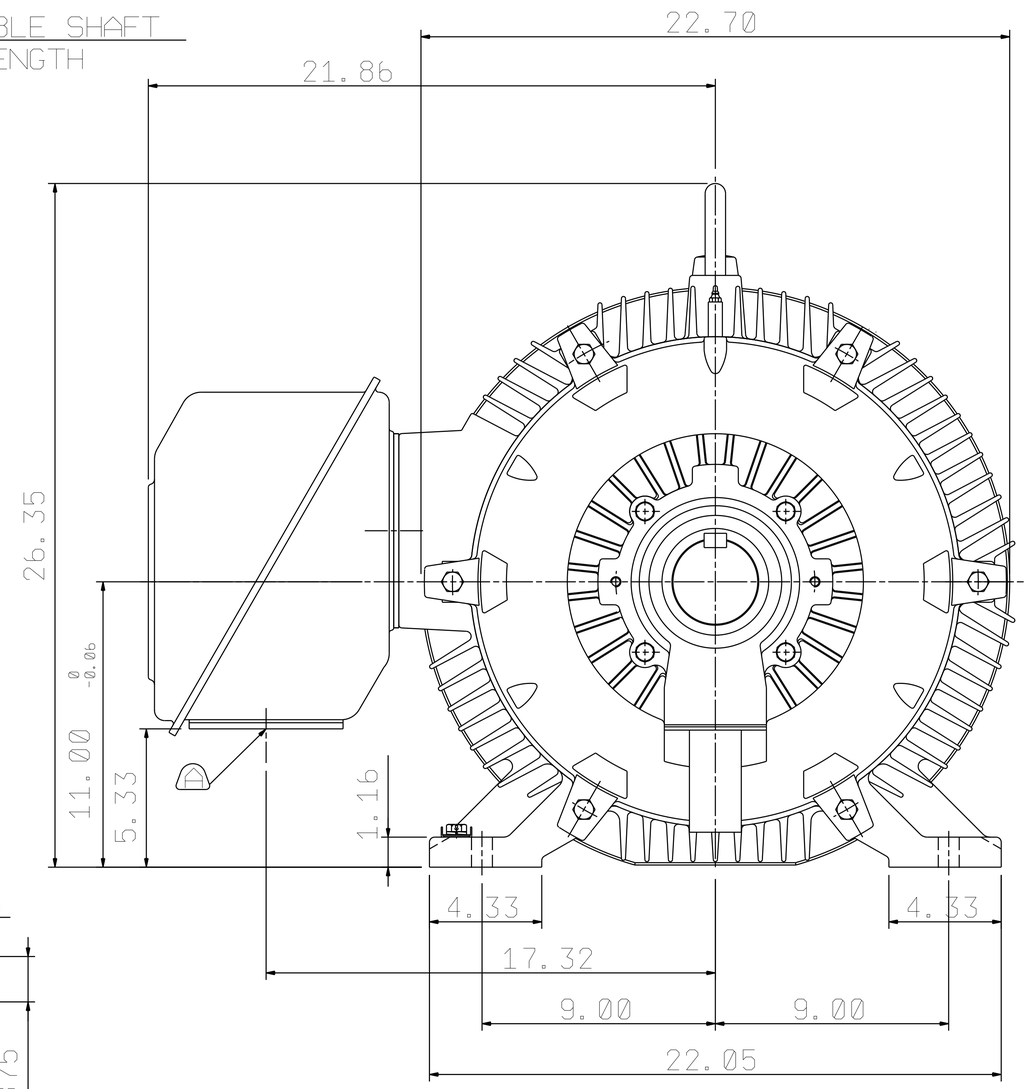

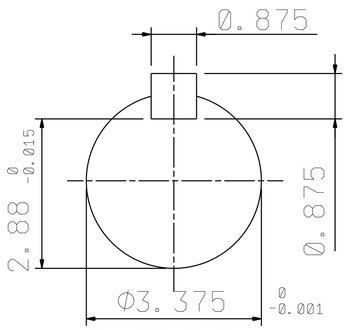

SHAFT END
ENLARGED VIEW

NOTE:
1. FOR DIRECT FLEXIBLE COUPLING
2. ENCLOSURE: IP54 PROTECTION

REMOVABLE COVER FOR CABLE ENTRY TO BE DRILLED BY THE CUSTOMER.

OUTLINE DIMENSIONS
3-PHASE INDUCTION MOTOR

MOTOR TYPE	AEHH8P	FRAME NO.	445T
CATALOG #	NP1504	DATE	MARCH. 5, 2020
ORDER NO.		TRANS. SHEET	.

APPD.	BEN. YANG	04·08·19
CHKD.	K.L.KUO	04·08·19
DWG.	K.L.KUO	01·29·19

TECO Westinghouse

DWG NO. 31057C524071

1	06.13.19	Show approx weight	K.L.KUO