| TYPE | OUTPUT | | POLE | TIME RATING | VOLTAGE V | Hz | SYN.SPEED R.P.M |
|---|---|---|---|---|---|---|---|
| | HP. | kW. | | | | | |
| AEHH8P | 150 | 111 | 4 | CONT. | 460 | 60 | 1800 |

TOTALLY ENCLOSED FAN-COOLED TYPE. SQUIRREL-CAGE ROTOR

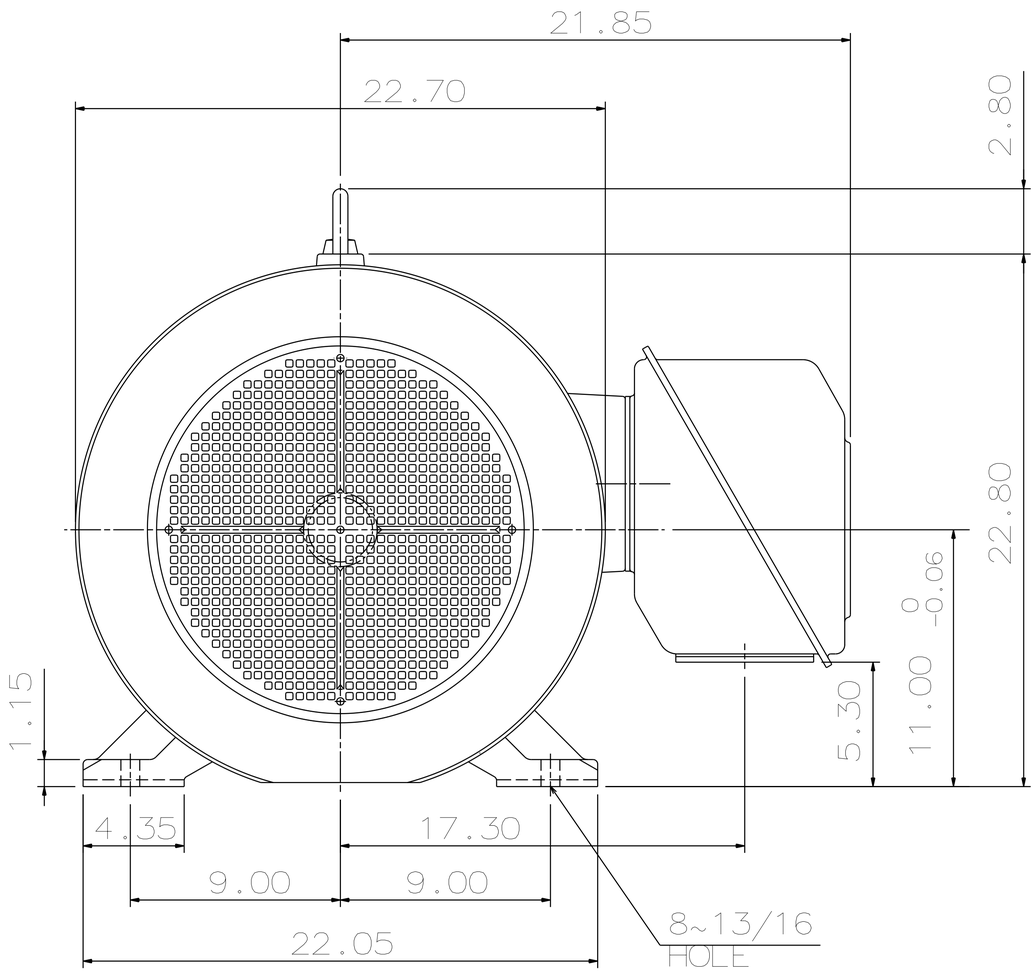


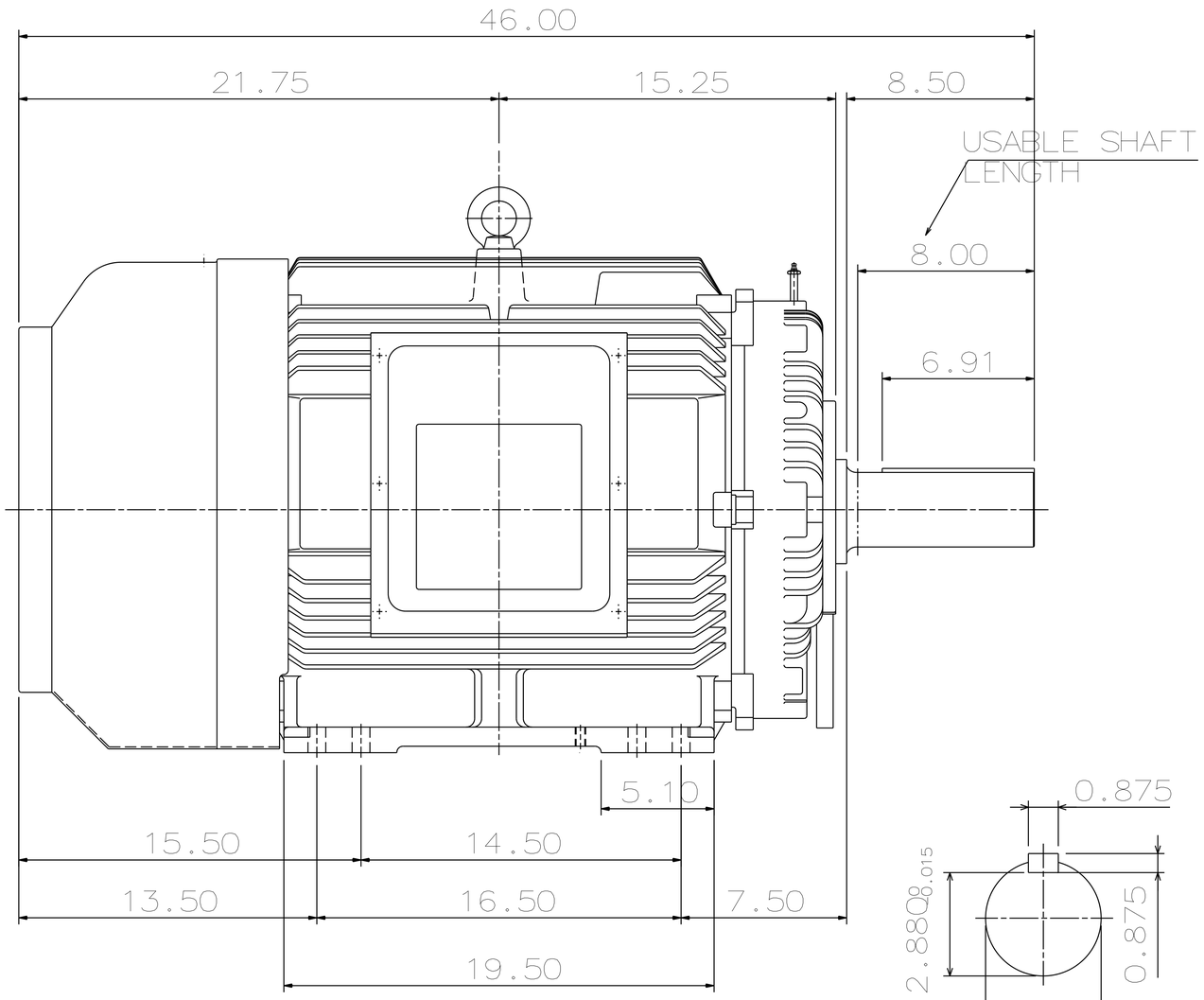


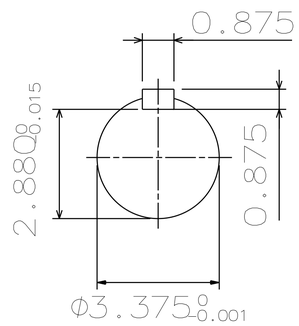


SHAFT END
[ENLARGED VIEW]

NOTE:

1. DIMENSIONS IN INCHES
2. FRAME SIZE 445T
3. F CLASS INSULATION, S.F. 1.15
4. FOR DIRECT FLEXIBLE COUPLING
5. BEARING NO.: DRIVE END: 6318C3
   OPP. DRIVE END: 6316C3
6. ENCLOSURE: IP44
7. APPROX. WEIGHT: 1700 LBS
8. SHAFT GROUNDING RING INSTALLED

| | | |
|---|---|---|
| DWN. | S.LEE | JAN• 26 •2011 |
| CHKD. | S.LEE | JAN• 26 •2011 |
| APPD. | H.LIU | JAN• 26 •2011 |

DATE FEB. 11, 2011

CATALOG #: NP1504G

OUTLINE DIMENSIONS

3-PHASE INDUCTION MOTOR

TECO Westinghouse

DWG NO. 3A049DWB10464-26

REV: 00