DATE MARCH. 3, 2020	OUTLINE DIMENSIONS	MOTOR TYPE: AEHH8P
CAT. #: NP1/56	3-PHASE INDUCTION MOTOR	FRAME NO. 182T

Pole	HP	kW	Hz	VOLT	r/min(rpm)
6	1.5	1.1	60	230/460	1200

Ins	Rating	Dimension in	Approx Weight	Bearings
F	CONT.	Inch	77lbs	DE: 6306ZZ NDE: 6206ZZ

Totally Enclosed Fan-Cooled Type. Squirrel-Cage Rotor.

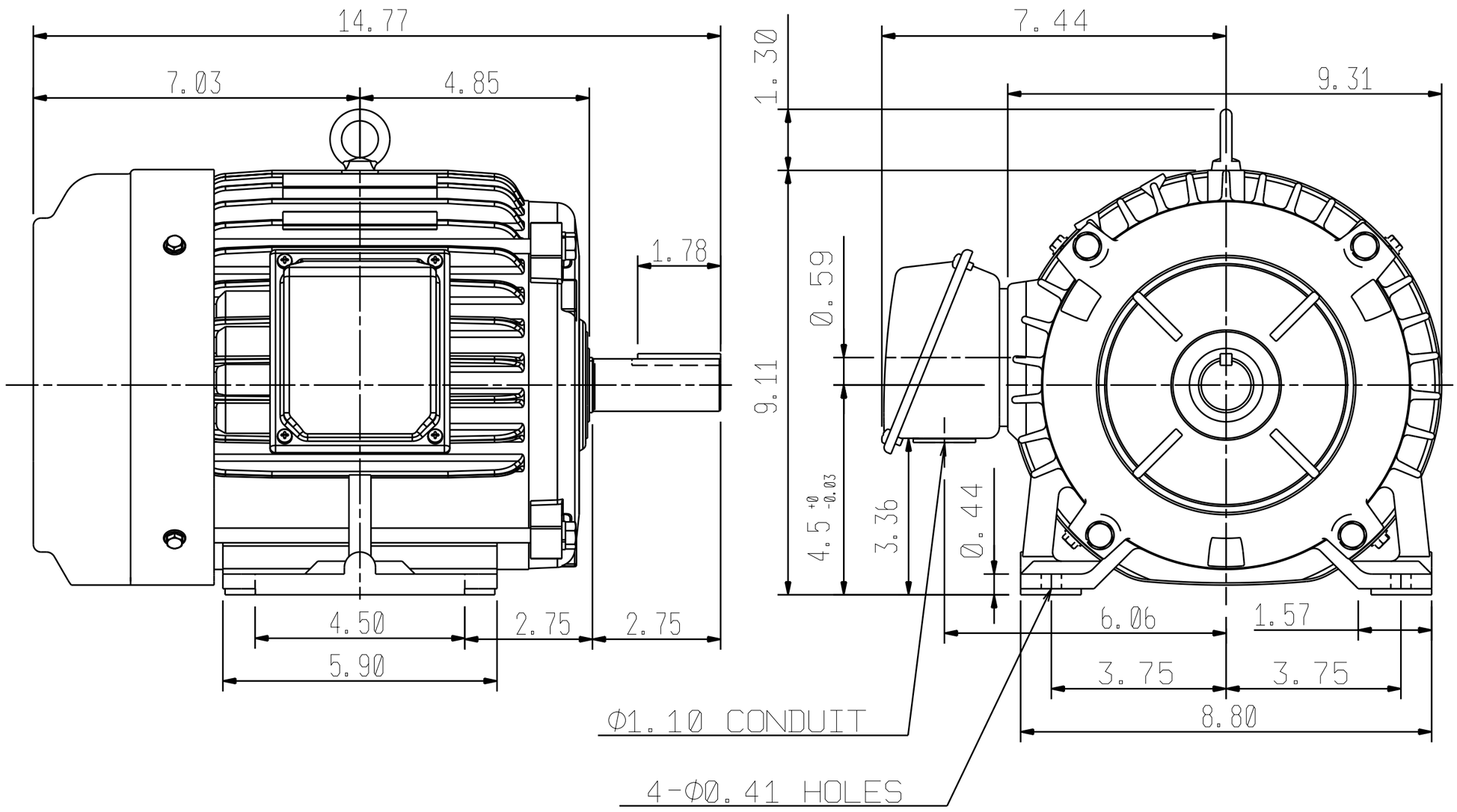

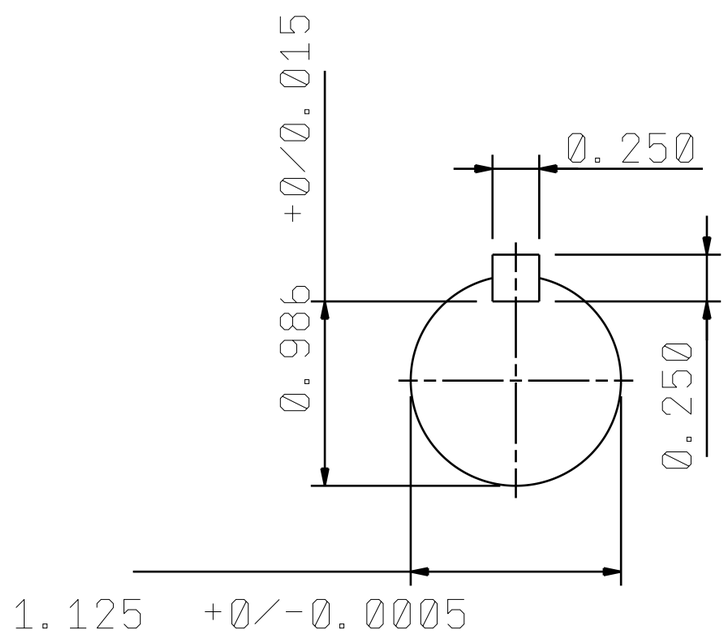

1	07 19 19	Modified Dimesions	Mahato

DWG.	W.F.PON	07·12·19	TECO Westinghouse	DWG NO.
CHKD.	M.C.JENG	07·16·19		31049R341061
APPD.	M.C.JENG	07·16·19		